Jan. 14, 1930. A. P. STECKEL 1,744,016

METAL ROLLING

Filed June 30, 1923 6 Sheets-Sheet 4

Fig. 8.

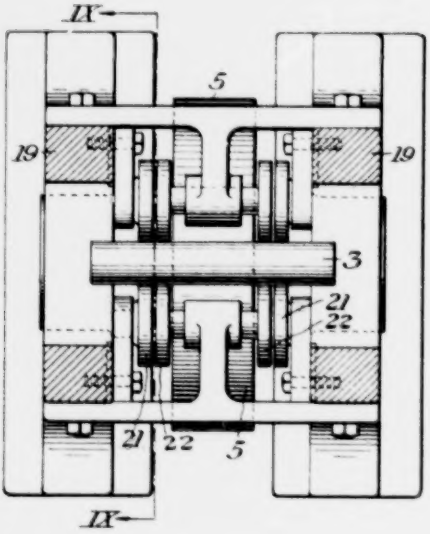

Fig 9.

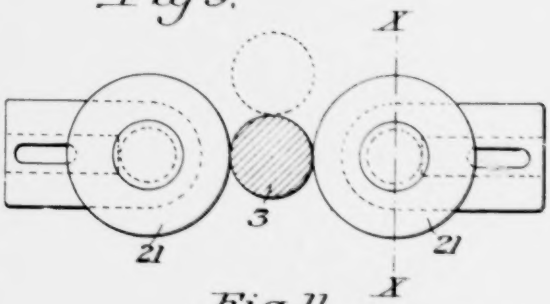

Fig. 10

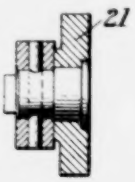

Fig. 11.

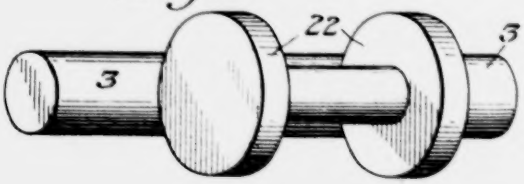

INVENTOR

Abram P. Steckel

by his attorneys

[illegible]

Jan. 14, 1930. A. P. STECKEL 1,744,016

METAL ROLLING

Filed June 30, 1923 6 Sheets-Sheet 5

Fig. 13.

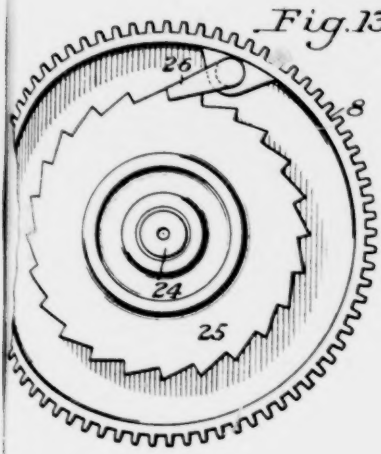

Fig. 12.

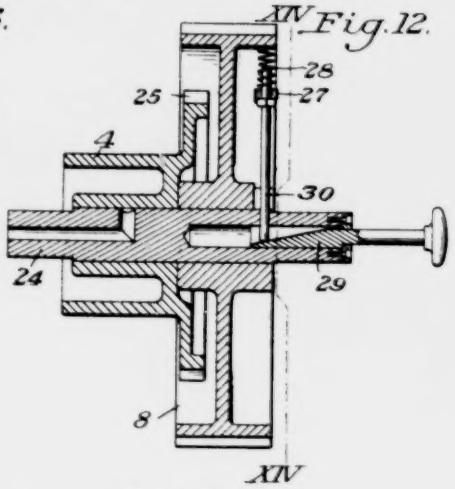

Fig. 14.

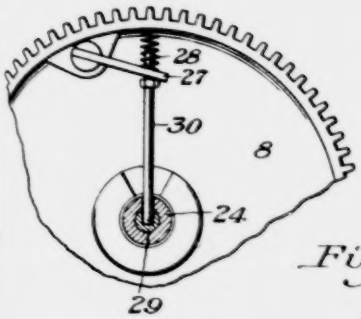

Fig. 15.

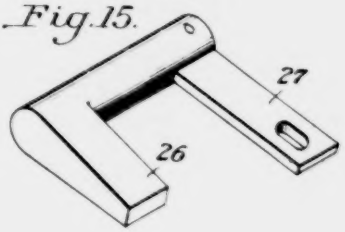

Fig. 16.

Fig. 19.

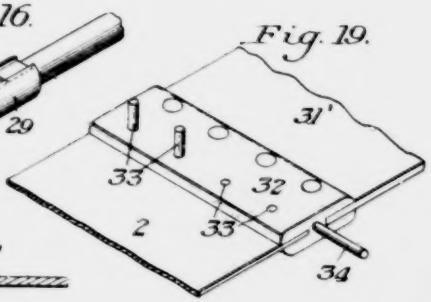

Fig. 17.

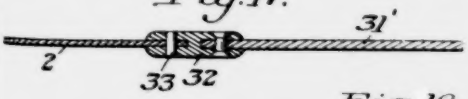

Fig. 18.

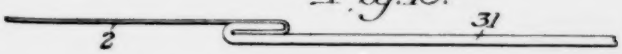

INVENTOR

Abram P. Steckel

by his attorneys

Patented Jan. 14, 1930

1,744,016

UNITED STATES PATENT OFFICE

ABRAM P. STECKEL, OF YOUNGSTOWN, OHIO, ASSIGNOR TO THE COLD METAL PROCESS COMPANY, OF YOUNGSTOWN, OHIO, A CORPORATION OF OHIO

METAL ROLLING

Application filed June 30, 1923. Serial No. 648,761.

This invention relates to metal rolling and is particularly valuable for cold rolling metal into thin strip form. It also relates to a new cold process for making economically thin sheet metal hitherto made by hot rolling in packs, notably commercial tin plate, and also contemplates a new and improved product resulting from the practice of the new method herein disclosed.

Cold rolling, as practiced hitherto, has been so expensive as to limit its application mostly to giving to the metal the high finish which is characteristic of the cold rolling process. The high cost of the process accounts for the practice of producing cold rolled material of any given gage from hot rolled material of only a slightly thicker gage, the reduction being incidental, and determined by the minimum amount of cold rolling necessary to produce the required degree of perfection of finish. Cold rolling has therefore been primarily an expensive finishing process, and not a cheap reduction process.

In cold rolling as heretofore practiced it has been generally considered necessary to anneal the material after it has been reduced to half its original thickness, and as a consequence great reductions by cold rolling have always required a large number of intermediate anneals. In order to prevent such hardening of the strip with the accompanying annealing, I use a roll, or preferably a pair of rolls, of comparatively small diameter. These rolls do not have the necessary strength to be self supporting, and are therefore provided with backing rolls of large diameter and of the necessary strength to withstand the rolling pressure. The backing rolls have an anti-friction mounting. This permits the rolls to be driven principally or entirely by the tension on the delivered strip, such tension being exerted by the winding reel or by a subsequent pair of rolls. The delivered strip may, therefore, be maintained under a constant and automatically regulated tension, which is highly desirable in cold rolling as it insures straightness of the product. This tension should be substantially constant to insure uniformity of gauge. The anti-friction mounting also permits the strip to be rolled at high speed, it saves so much power that the usual mill drive may be radically simplified or even dispensed with. In the usual cold rolling mill operating on thin material, the power losses in bearing friction commonly amount to about ninety percent of the power applied, and necessitate heavy driving mechanism for the rolls.

The high power losses have made it impracticable to cold roll thin strip in a continuous mill. Because of the large bearing friction, the total power applied to a stand of rolls has been so enormously in excess of the power required to tear the strip, that the usual accidental variations in power and friction would have resulted in tearing the strip if a straightening tension were maintained on the strip between the several stands of rolls. By reducing the diameter of the rolls operating on the strip, and thereby lessening the necessary roll pressure, I can provide an anti-friction backing for the small rolls which permits the rolls to be driven largely, if not entirely, by the tension on the delivered strip. This permits a straightening tension to be applied without tearing the strip between roll stands. The anti-friction backing of the small rolls may be provided by anti-friction bearings for the backing rolls, or by making the backing rolls of a large diameter compared with their bearing shaft so as to resemble wheels, which construction will permit the use of plain shaft bearings, or by any other suitable way for reducing the frictional drag on the small rolls.

While in ordinary cold rolling practice, it is necessary to re-anneal low carbon steel after rolling it out to twice the original length, I have found it possible with my apparatus employing small supported rolls of from 2 to 3 inches in diameter, to roll out low carbon steel strip to about twenty-five times its original length without re-annealing and without a final hardness greater than that known in the art as "quarter hard".

The small rolls not only elongate the material without unduly lowering its ductility, but also permit a given reduction in each roll

pass with less rolling pressure than in the usual practice now in vogue in cold rolling with large rolls.

A further advantage of my cold rolling process, and with particular reference to the manufacture of thin tin-plate strip, which is used in making tin cans etc., resides in doing away with the pickling-off of the hot mill scale from the thin finished product. In the present practice of making tin-plate, it is hot rolled to substantially the final thickness. If this thin plate is pickled thoroughly enough to insure that the tin coating will adhere perfectly at all points, it loses so much metal and uses so much acid as to make a less thorough pickling more economical. The result of this compromise is that much of the product is imperfectly tinned. In my process as applied to making tin-plate strips, the strip is hot rolled to preferably about ten times its final thickness and then cold rolled to final thickness. The pickling off of hot mill scale may be carried out when the material is about ten times its final thickness, and when it has only one-tenth of its final exposed surface, so that the pickling operation is rendered much cheaper, both in the metal lost and the amount of acid used, and may be so thorough as to insure perfect tinning throughout. The cold rolled tin-plate as thus made has a superior mechanical structure and a better finish than the usual hot rolled tin-plate. It has a smoother surface than hot rolled strip, and therefore takes less tin to coat it. In the old process of hot rolling tin-plate, the plate after having been rolled to final thickness and pickled has been given a cold rolling as a burnishing operation. This burnishing cold rolling did not materially reduce the thickness of the plate and did not produce as highly a finished surface as I secure by reducing the strip to final thickness by cold rolling from a hot rolled strip of the thickness of two or more to ten times its final thickness.

Another advantage which is possible to secure by my process and which results in winding the cold strip on a reel under tension, is the natural tendency of the strip to bend. In certain can-making machinery, this natural tendency to curl or bend is highly desirable, and in fact tin-plate is often put through a special operation to put such curl into it.

The inherent result of the practice of my invention is a new product having numerous advantages over metals rolled by ordinary processes. Among these advantages may be mentioned the fact that the metal is flat and has no center crown as is ordinarily present, thus giving more footage of strip metal per pound of weight; no surface decarbonization; freedom from embrittlement; absence of edge cracking; hardness without loss of ductility; higher physical properties; and extreme accuracy of gauge. Developments in examination of metals by the method of X-ray analysis proved that the product inherently resulting from the practice of the process herein disclosed may be readily distinguished from the product of other rolling methods and such methods of analysis also show superior qualities in the product of my process.

All metals are crystalline in character and after proper treatment of a polished surface the so-called "micro-grains" are readily observable under a microscope. Each micro-grain consists of smaller crystal cells made up of atoms disposed in definite relationship in space. The general effect of unidirectional work such as rolling or wire drawing is to cause a readjustment of the crystal cells so that they approach as a limit a definite so-called "preferred" orientation. The crystal cells of alpha iron are on the body centered cubical system and in rolling or wire drawing these cells tend toward orientation in which the so-called [110] directions of the crystal cells are parallel to the direction of rolling. When this condition is reached, whether in hot or cold work, no further working of the metal can be attained without fragmentation and rupture. There is a further limitation in rolling, as of sheets or strips, in that the crystal cells reach as a limit a condition wherein the cube faces lie in or parallel to the surface of the sheet or strip. Further work is had only at the expense of fragmentation or rupture.

As these limiting conditions are approached, the amount of further work which the metal will withstand is correspondingly cut down, thus limiting the commercial application of the rolled or drawn product. Neither are the physical properties of such product uniform, longitudinally, transversely, and through the cross-section.

While it is customary to resort to heat treatment in order to eliminate the objectionable directional properties by re-crystallization of the grains, such heat treatment is invariably accompanied by grain growth, and in many cases re-crystallization in so-called "preferred orientations". Both these conditions are uncontrollable and undesirable. All of the disadvantages of annealing are well-known.

My improved process results in a product having equi-axed small uniform-sized grains with random orientation. In other words, the effect of my process is to reduce and elongate the metal far beyond the limits possible by rolling processes heretofore practiced, but without setting up the objectionable preferred orientation which limits further work and thus reduces the quality of the product. The character and orientation of the crystals in metals are readily ascertainable by X-ray analysis. The so-called "powder method" is not useful in this connection but the mono-

chromatic pin-hole method as applied to the examination of a piece of metal in the solid form reveals the character and orientation of the crystal cells. X-ray photographs of the product of my improved process taken by the monochromatic pin-hole method show concentric substantially uniformly intense continuous rings around the central undiffracted beam. There is apparently a balance of tensile and compressive forces which results in the product of my process very closely approaching if not reaching the ideal condition in so far as grain size and crystal cell orientation is concerned.

My invention also relates to certain other combinations and arrangements of parts hereinafter more particularly pointed out, the advantages of which will be apparent to those skilled in the art from the following description.

My copending application, Serial No. 412,742, filed December 9, 1929, as a division of this application, describes and claims the mill per se herein disclosed and independently of the feature of applying tension to the delivered strip. My copending application, Serial No. 415,143, filed Dec. 19, 1929, as a division and continuation-in-part of this application, more particularly describes and claims the application of the invention to the production of bi-metallic articles such as tin plate. My copending application, Serial No. 415,144, filed December 19, 1929, as a division of this application, more particularly describes and claims the side bearing rollers for holding the working roll against lateral displacement.

In the accompanying drawings illustrating the preferred embodiment of my invention,—

Figure 1 is a diagrammatic view showing the strip being pulled through a roll pass which comprises a pair of small reducing rolls, supported by anti-friction backing rolls, together with a pair of reels for winding the strip;

Figure 2 is a view similar to Figure 1, showing the winding reels disposed adjacent to one another and showing a single small reducing roll instead of a pair of small rolls;

Figure 3 is a diagrammatic showing similar to Figure 1 but showing a mill of the continuous type having a plurality of roll stands;

Figure 4 is a vertical section through a mill embodying my invention, the section being transversely of the direction of travel of the strip;

Figure 5 is a section on the line V—V of Figure 4;

Figure 6 is a detail section on the line VI—VI of Figure 4, showing one manner of retaining the small reducing rolls;

Figure 7 is an elevation, partly in section, of a modified form of apparatus;

Figure 8 is a section on the line VIII—VIII of Figure 7;

Figure 9 is a section on the line IX—IX of Figure 8;

Figure 10 is a section on the line X—X of Figure 9;

Figure 11 is a perspective view of one of the small reducing rolls as used in the embodiment of Figure 7, together with the anti-friction device for supporting the same against longitudinal movement;

Figure 12 is a section on the line XII—XII of Figure 7;

Figure 13 is an end view of Figure 12;

Figure 14 is a section, partly broken away, on the line XIV—XIV of Figure 12;

Figures 15 and 16 are perspective views of portions of the apparatus shown in Figure 12;

Figures 17 and 18 are detail views showing the manner of attaching a strip to be reduced to the winding mechanism;

Figure 19 is a perspective view of the attachment device shown in Figure 17, together with apparatus for stopping the action of the reel;

Figure 20 is a diagram showing the manner of driving the reels in the embodiment of Figure 7; and

Figure 21 is a view, largely diagrammatic, showing one manner of driving the reducing rolls.

In the embodiment of my invention shown in Figure 1, a strip of material 2, which is to be reduced by cold rolling, is entered between small reducing rolls 3 and attached in any convenient manner to a pulling device, such as a reel 4. The reducing rolls 3 are smaller than would be required to withstand the spreading force due to rolling, and are supported by larger backing rolls 5 having anti-friction mounting. The reducing rolls are much smaller than those commonly employed in rolling mill practice, and should for ordinary work be less than six inches in diameter, preferably from two to four inches. The backing rolls have a diameter comparable with that of the rolls now commonly employed in steel rolling mills, which may be one or two feet or more. After the strip has been reduced, the rolls may be set closer together and the material pulled back through the mill in the other direction, as by a reel 6.

Figure 2 shows a similar mill, but with the reels 4 and 6 placed side by side and driven from a common motor pinion 7 through gears 8. A suitable clutch mechanism is provided, as hereinafter set forth. An idler drum 9 serves to change the direction of travel of the strip 2. In either of these embodiments, the material is preferably reduced by a number of passes by winding the material from one drum or reel to the other, then moving the rolls closer together and pulling the material in the other direction. While a certain amount of power may be supplied to the rolls, it is desirable that a large part of the work be done by pulling on the strip itself, since

this insures rolling the product straight, and accurate gauge.

In Figure 1 a pair of reducing rolls 3 is illustrated, while in Figure 2 a single reducing roll is illustrated, the strip passing between the small reducing roll 3 and one of the large rolls 5. The action of a small roll or rolls in giving increased elongation with decreased roll pressure depends upon the relatively large angle between the roll surfaces as compared with the usual large rolls. This is preferably attained by using two small rolls, but it is possible to get the same effect, but to a lesser degree, by using a single small roll working against a large roll.

Figure 3 shows a plurality of mills, each employing a pair of small reducing rolls 3 and larger supporting rolls 5. This embodiment takes the form of a continuous mill, wherein the strip 2 is supplied from a reel 4' and passes through all the mills in succession, being finally wound on the reel 6'. Here successive reductions are effected by each mill, so that the strip is materially longer and thinner after each pass. The success of a continuous mill cold rolling very thin material is practically dependent upon keeping the material under heavy tension throughout. By employing the small diameter reducing rolls with lowered roll pressures and consequently permitted anti-friction backing, each roll stand has so little friction that it may be driven (as to the rolling done by it) largely or entirely by the pull on the delivered material exerted by the motor or motors on the winding-up reel or the mill next ahead, as the case may be. This means that the delivery reel largely drives the last mill (as to the reduction made in the last mill) through the tension on the strip. The pull exerted by the last mill pulls the material through the next mill, and so on, so that the motor or motors on the first mill are used to thread in the front end of the entering strip, after which much less rolling power is exerted on the rolls of the first mill by its motor or motors. By this arrangement, a sufficiently heavy tension may be kept on the strip to roll it straight. The friction on the several rolls is reduced to the point where the variations in friction are insufficient to tear the strip. The motors may be relatively small, and it will be seen that with reasonable attention to their adjustment, the maximum torque of which they are capable is insufficient to tear the material between the stands The motors on each stand have normal speeds suitable to the respective stands and can be regulated to give desired tension to the material throughout. This mode of operation is impossible with the ordinary cold mills in which it is usual to waste about 90% of the applied power in high and variable bearing friction, so that any attempt to maintain a certain tension on the frail material between stands by the adjustment of the roll driving motors would result in either slackness or tearing of the material.

In a continuous mill, as indicated in Figure 3, motors 10 are preferably provided for each of the roll stands. These motors may be directly connected with the reducing rolls 3, preferably through wobblers 11 or similar flexible couplings, to allow for adjustment of the rolls. These motors are preferably compound wound, and have a drooping speed characteristic such that the motors will divide up the work among themselves after the strip is entered in all the mills. Motors of this character, in which the torque tends to vary inversely with the speed, are of common design in the electrical industry and may be purchased in the open market, and hence their construction does not need to be described in detail. Alternating current motors may be used, but I prefer compound wound direct current motors. As illustrated in Figure 3, the shunt winding of each motor is provided with a rheostat 12 for adjusting the motor speed as desired. The motor 13 of the same type is provided for driving the winding reel 6'.

In Figures 4, 5 and 6, I have shown one form of mill which may be employed, omitting the driving mechanism. In case this mill is used as a reversing single pass mill of the type shown in Figures 1 and 2, the driving mechanism may be dispensed with and the mill driven by the pull of the strip, while if it be employed in a continuous mill, as shown in Figure 3, suitable motor connections will be made to the rolls. The reducing rolls 3 and their supporting rolls are carried in a pair of housings 14, and screw-downs 15 are provided for regulating the distance between the rolls. The reducing rolls 3 are provided with necks 16 held in brasses 17 which serve to hold the rolls against horizontal movement. The brasses 17 may be provided with suitable adjustments if desired. The anti-friction mounting for the backing rolls 5 is provided in this case, by making the rolls 5 of large diameter compared with the roll shafts 5^a. The rolls and their shafts, therefore, resemble wheels more than the usual rolling mill rolls in which the roll necks are of a diameter comparable with that of the rolls. The turning moment exerted by a wheel or roll of this character on its shaft or neck is exerted through a radius so much larger than the bearing shaft radius that it results in an anti-friction mounting for the large rolls 5, and therefore an anti-friction backing for the small rolls 3. With this construction, ordinary plain brasses 5^b may be used for the bearings of the shafts or necks 5^a of the backing rolls 5, and friction will be reduced to a point where with small rolls of two or three inch diameter, strip as

thin as .005 of an inch may be rolled entirely by the power exerted through tension on the strip in pulling it through the mill.

Figures 7 to 14 illustrate a modification generally similar to that shown diagrammatically in Figure 2. In this case, the anti-friction mounting for the supporting rolls is furnished by the roller bearings 5' for the necks of the backing rolls 5. The reels 4 and 6 are carried by a frame 18 which is spaced from the mill housings 19 by links 20. The housings 19 carry an idler drum 9 for changing the direction of travel of the strip 2.

In this embodiment of my invention, the reducing rolls 3 are not provided with necks, but are made extra long and are held against movement longitudinally of the strip by means of rollers 21 and 22. These rollers are supported by the housings 19, as best shown in Figure 8. This construction is desirable in some instances, since the rolls 3 may be readily removed and dressed to size. The rolls 3 are made long enough to insure proper bearing for the full width of the strip. There is generally no tendency for the roll to move axially unless it should become slightly tapered or get out of alinement, but the extra length is provided for taking care of any such tendency which may arise.

The reels 4 and 6 are driven through gears 8 from a common pinion 7 which is connected to a motor 23. Each gear 8 drives a shaft 24 which carries one of the reels, as shown in Figures 12 and 13. Each reel is provided with a ratchet wheel 25 having a pawl 26. Such product has improved characteristics, as above set forth. An arm 27 and a spring 28 acting thereon tend to normally hold the pawl 26 in engagement with the ratchet wheel 25. The shaft 24 is hollow and is provided with a tapered slide 29 which engages a push rod 30, the remote end of which is connected to the arm 27. If it is desired to disconnect the reel from the gear, the tapered slide 29 is pushed inwardly thus raising the pawl 26 out of engagement with the ratchet wheel 25.

In order to roll substantially the entire length of the strip and avoid waste, a flexible leader 31 of proper length is permanently attached to each of the reels. The strip 2 may be fastened to the leader in any desired manner. Figure 18 shows the strip attached simply by bending it under, and fitting the bent portion into a corresponding hook on the leader 31. Figures 17 and 19 show a jaw 32 which is permanently riveted to the end of the leader 31'. In this form, the end of the strip 2 is slipped into the jaw 32 and held there by removable pins 33. The use of a flexible leader makes it possible to roll the strip almost to its extreme end without losing the grip thereon for pulling it back through the mill for a further reduction after the screw-downs have been operated to bring the reducing rolls 3 closer together.

In order to stop the mill at the proper time, a trip 34 is provided. This trip is preferably secured to the jaw 32, but may be fastened to the leader 31 at any point, the actual position being, of course, determined by the position of the switch about to be described, the length of the leaders, and the distance between the mill and the reels. In any event, it is in definite relation to the end of the strip, so that the stopping means is governed by the position of the end of the strip.

Figure 20 shows the preferred form of stopping mechanism. Here the strip 2 is shown as being wound from the reel 4 onto the reel 6. As the end of the strip is approached, the leader 31 is unwound, and the trip 34 strikes a switch arm 35 and moves it to the dotted line position of Figure 20. Springs 36 tend to normally hold the switch arm 35 in vertical position. In such position, the switch arm 35 contacts with an arc 37 and completes the circuit for the winding motor 23. When it is moved to dotted line position, however, the switch arm is moved out of contact with the arc 37 and the motor stops. At this time the tapered slides 29 are shifted by the operator to place the reel 4 in engagement with its corresponding gear 8 and to disengage the reel 6. A contactor 38 is then depressed and the motor starts up and begins to wind the material from the reel 6 back through the mill to the reel 4 to effect another reduction. The leader 31 is first wound on the reel 4, and as it moves back the switch arm 35 returns to normal position, at which time the contactor 38 may be released and the motor will continue to operate. At the end of this reducing operation, a trip similar to the trip 34 on the leader of the reel 6 strikes the lower arm 35' and again moves the switch arm out of contact with the arc 37. It will be apparent that the leaders for the two reels may be of different length, as dictated by the design, and that the trips 34 may be differently placed also. The operation as above set forth is repeated until the strip has been reduced to the desired thickness.

My process may be advantageously employed in the production of a superior tin plate in strip form and at a price to compete with hot rolled tin plate. In making tin plate by my process, the material is hot rolled in strip form to a thickness of double or over that of the final plate. Preferably the hot rolling is employed to reduce the thickness of the strip to about ten times that of the final plate. The hot rolled strip is then pickled to remove the mill scale and the reduction to final gage is carried out by my process of cold rolling. The roll pressures necessary for elongation are sufficiently low so that the strip is not hardened to require re-annealing. The anti-friction backing for the small rolls allows the necessary tension to be maintained on the strip to keep the strip straight but

without tearing it. The strip may also be rolled at a high speed since the roll pressures permit of high speed anti-friction mountings for the backing rolls. The strip used for making the greater part of the tin can production is not over about 5 or 6 inches in width, and is particularly adapted for rolling and reeling by my process as contrasted with rolling in packs. The action on the strip in its reduction by my cold rolling process is radically different from the cold rolling now employed for burnishing the surface of hot rolled tin plate. Such burnishing rolling does not materially reduce the thickness of the material and gives a product inferior to that produced by the actual reduction of the material by cold rolling. The strip as rolled to finished gage is annealed and is then in condition for the usual process of tin-plating to make the final salable product.

It is found in practice that the strip is maintained straight through the rolling or reducing operation. The area of contact of the small rolls with the steel is so small that apparently the tension which is exerted on the delivery side of the mill extends right through the mill at least in some degree, and as a result the strip is under tension at the point of reduction.

While the present process may be advantageously used for making tin plate, because of the large demand for tin plate and the economy in making it in strip form by my rolling process, it is obvious that my rolling process may be employed in making cold rolled strip for any purpose. The present invention is not limited to its preferred embodiment or to the details herein illustrated and described, but may be otherwise embodied within the scope of the following claims.

I claim:

1. A cold strip mill comprising at least one relatively small reducing roll and a backing roll therefor, two reels to which the ends of the strip to be rolled may be secured, and means for operating the reels to pull the strip back and forth through the mill, including an automatic stop for stopping the reels after the strip is unwound from one reel, substantially as described.

2. A continuous cold strip rolling mill comprising a plurality of stands of rolls, each stand having at least one relatively small reducing roll and an anti-friction backing roll therefor, each stand of rolls being arranged to be driven principally by the tension on the delivered strip, substantially as described.

3. A continuous cold strip rolling mill comprising a plurality of stands of rolls, some at least of which have a relatively small reducing roll and an anti-friction backing roll therefor, the rolls being arranged to be driven principally by the tension on the delivered strip, substantially as described.

4. A continuous cold strip rolling mill, comprising a plurality of stands of rolls, some at least of which have relatively small reducing rolls and relatively large backing rolls therefor having anti-friction mounting, a delivery reel, means for driving the reels and at least some of the stands of rolls, the last stand of rolls being arranged to be driven principally by the tension on the strip exerted by the delivery reel, the next to the last stand of rolls being arranged to be driven principally by the tension on the strip exerted by the last stand of rolls, and so on, whereby a tension is maintained on the strip between the delivery reel and the rolls and between the several stands of rolls, substantially as described.

5. The process of cold rolling strip, comprising passing it through a plurality of stands of rolls and maintaining a tension on the strip between the roll stands, substantially as described.

6. The process of cold rolling strip, comprising pulling the strip through reducing rolls by means of a reel under sufficient tension to pull the strip straight and impart a permanent tendency to curl to the strip, substantially as described.

7. A continuous mill for rolling metal strip comprising a plurality of stands of rolls, the several stands having at least one relatively small reducing roll and anti-friction backing therefor, the several stands of rolls being arranged to be driven principally by tension on the delivered strip, substantially as described.

8. A continuous mill for the rolling of metal strip comprising a plurality of stands of rolls, the several stands each having a pair of relatively small reducing rolls and anti-friction backing rolls therefor, the several stands of rolls being arranged to be driven principally by the tension on the delivered strip, substantially as described.

9. A continuous mill for the rolling of metal strip comprising a plurality of stands of rolls having relatively small reducing rolls and relatively larger backing rolls therefor having anti-friction mounting, a delivery reel, and means for driving the reel and at least some of the stands of rolls, the last stand of rolls being arranged to be driven principally by tension on the strip exerted by the delivery reel, substantially as described.

10. A continuous mill for the rolling of metal strip comprising a plurality of stands of rolls having relatively small reducing rolls and relatively larger backing rolls therefor having anti-friction mounting, a delivery reel, and means for driving the reel and at least some of the stands of rolls, the last stand of rolls being arranged to be driven principally by tension on the strip exerted by the delivery reel, the next to the last stand of rolls being arranged to be driven principally

by the tension on the strip exerted by the last stand of rolls, and so on, whereby a tension is maintained on the strip between the delivery reel and the rolls and between the several stands of rolls, substantially as described.

11. A continuous mill for rolling metal strip comprising a plurality of stands of rolls, the several stands having at least one relatively small reducing roll and an anti-friction backing roll therefor, the several stands being arranged to successively engage the material and maintain it under tension between stands, a substantial part of the power required for driving the several stands being supplied by such tension.

12. A continuous mill for the rolling of metal strip comprising a plurality of stands of rolls having relatively small reducing rolls and relatively larger backing rolls therefor with anti-friction mounting, a delivery reel, and means for driving the reel and at least some of the stands of rolls, the reel being adapted to supply a substantial part of the power, through tension on the delivered strip, required for the last stand of rolls, said last stand of rolls being arranged to supply, through tension on the strip, a substantial part of the power required for operating the next to the last stand of rolls, and so on, whereby a tension is maintained on the strip between the delivery reel and the last stand of rolls and between the several stands of rolls.

13. In a process of working metal the steps consisting in subjecting the metal to combined rolling and tension and maintaining a balance between the roll and tension forces such as to substantially inhibit preferred orientation of the crystal cells in the metal being worked, whereby the product has substantial random orientation.

14. In the process of working metal, the steps consisting in subjecting the metal to combined rolling and tension, and maintaining a balance between the rolling and tension forces such as to substantially inhibit a preferred orientation of the crystal cells in the metal being worked with their {110} directions in the direction of working, whereby the product has substantial random orientation.

15. As a new manufacture, worked metal which has been subjected to combined rolling and tension forces so related as to inhibit the arrangement of the crystal cells in preferred orientation, the metal having small grains arranged in random orientation.

16. As a new manufacture worked metal which has been subjected to combined rolling and tension forces so related as to inhibit the arrangement of the crystal cells in preferred orientation, the metal having small grains arranged in random orientation, said random orientation being such as to produce, in the solid form, an X-ray pattern having substantially continuous rings about the central undiffracted beam.

17. As a new manufacture worked metal which has been subjected to combined rolling and tension forces so related as to inhibit the arrangement of the crystal cells in preferred orientation, the metal having small grains arranged in random orientation, said random orientation being such as to produce, in the solid form, an X-ray pattern having substantially continuous rings, each of substantially uniform intensity, about the central undiffracted beam.

18. As a new manufacture worked metal which has been subjected to combined rolling and tension forces so related as to inhibit the arrangement of the crystal cells in preferred orientation, the metal having small grains arranged in random orientation, said random orientation being such as to produce, in the solid form, an X-ray pattern having substantially continuous rings about the central undiffracted beam, such rings being substantially free of localized bright spots.

19. As a new manufacture, strip metal which has been subjected to combined rolling and tension forces so related as to inhibit the arrangement of the crystal cells in preferred orientation, the metal having small grains arranged in random orientation.

20. As a new manufacture, strip metal which has been subjected to combined rolling and tension forces so related as to inhibit the arrangement of the crystal cells in preferred orientation, the metal having small grains arranged in random orientation, said random orientation being such as to produce, in the solid form, an X-ray pattern characterized by having substantially continuous rings about the central undiffracted beam and by the substantial absence of localized bright spots in such rings.

21. The process of cold rolling thin strip metal, comprising pulling a strip of thin metal past a relatively small reducing roll having an anti-friction backing roll.

22. The process of cold rolling thin strip metal, comprising pulling a strip past a relatively small reducing roll having an anti-friction backing roll, with a tension sufficient to furnish the principal driving power for the roll.

23. The process of cold rolling thin metal strips, comprising pulling the strip past a relatively small reducing roll provided with an anti-friction backing roll and maintaining a sufficient tension on the delivered strip to insure its delivery in an unwrinkled state.

24. A mill for rolling strip-like material having at least one relatively small reducing roll having an antifriction backing roll and means for engaging the issuing material in such manner that the same may be maintained under tension, the mill being arranged

to be driven largely by such tension on the delivered material.

25. A mill for rolling strip-like material having relatively small reducing rolls with anti-friction backing rolls and means for engaging the issuing material in such manner that the same may be maintained under tension, the mill being arranged to be driven largely by such tension on the delivered material

26. A mill for rolling strip-like material having relatively small reducing rolls with anti-friction backing rolls and a reel for engaging the issuing material in such manner that the same may be maintained under tension, the mill being arranged to be driven largely by such tension on the delivered material.

In testimony whereof I have hereunto set my hand.

ABRAM P. STECKEL.

Oct. 21, 1930. A. P. STECKEL 1,779,195

METHOD AND APPARATUS FOR ROLLING THIN SHEET LIKE MATERIAL

Original Filed June 30, 1923 4 Sheets-Sheet 1

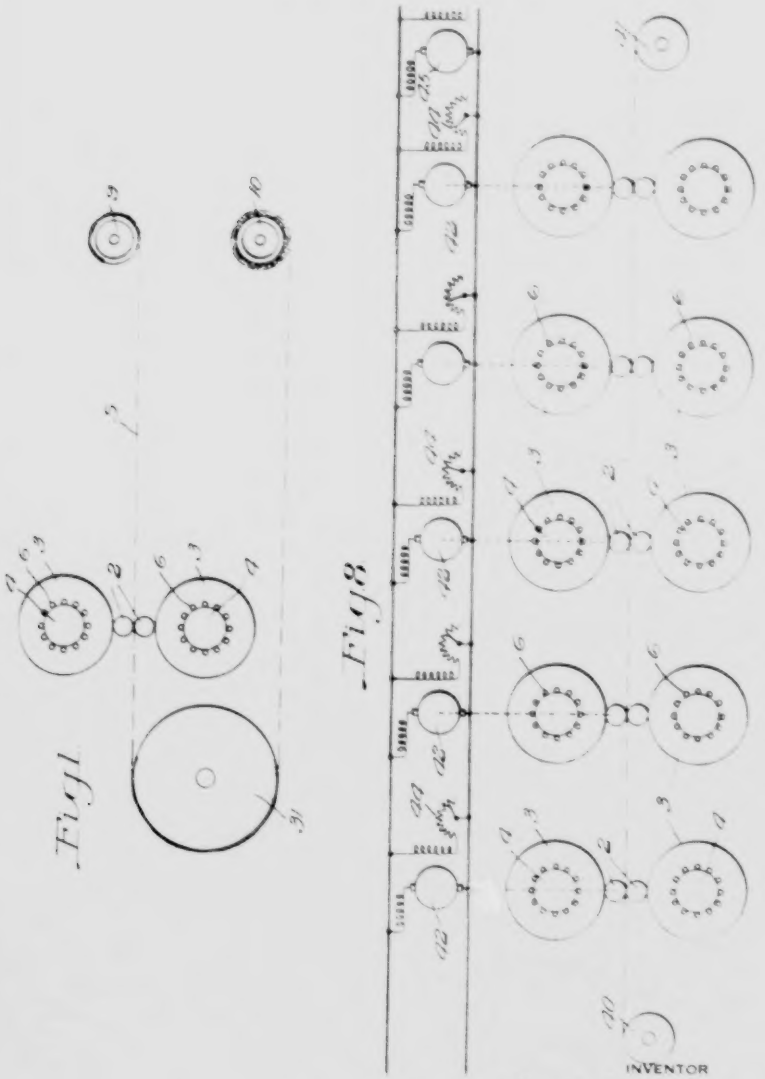

INVENTOR

Abram P. Steckel
by his attys.
Byrne, Stetten, Pennie & Blenko

Oct. 21, 1930. A. P. STECKEL 1,779,195

METHOD AND APPARATUS FOR ROLLING THIN SHEET LIKE MATERIAL

Original Filed June 30, 1923 4 Sheets-Sheet 2

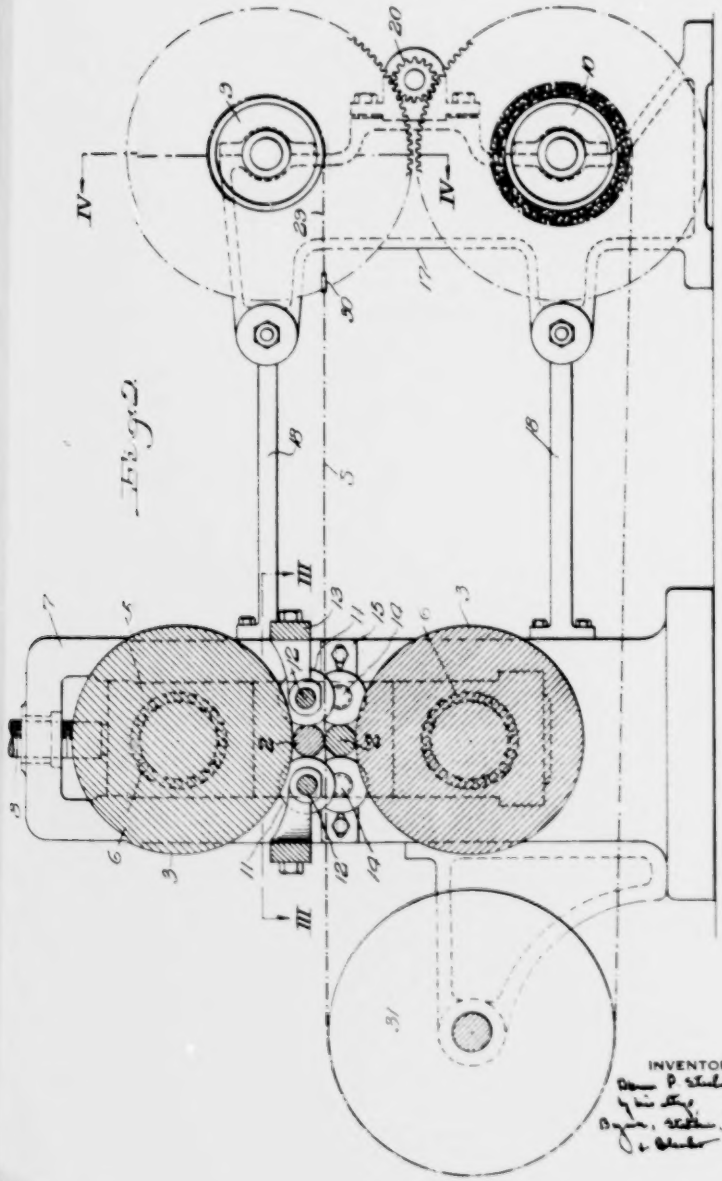

Fig. 2.

INVENTOR
A. P. Steckel
By [illegible]

Oct. 21, 1930. A. P. STECKEL 1,779,195

METHOD AND APPARATUS FOR ROLLING THIN SHEET LIKE MATERIAL

Original Filed June 30, 1923 4 Sheets-Sheet 3

Fig. 3.

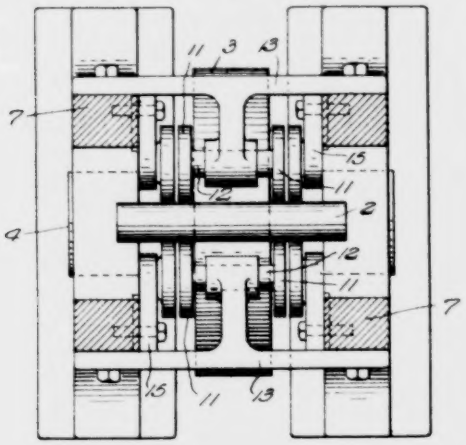

Fig. 9.

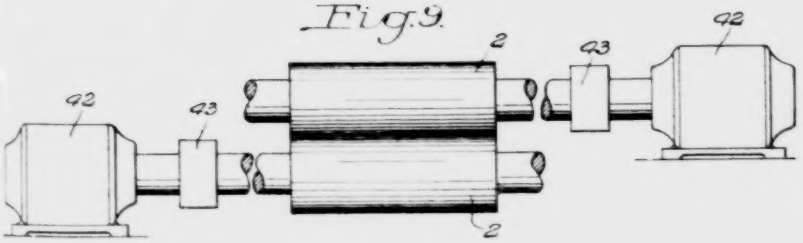

INVENTOR

Alexander P. Steckel,
by his attys,
Byrne, Stebbins, Parmelee & Blanchard

Oct. 21, 1930. A. P. STECKEL 1,779,195

METHOD AND APPARATUS FOR ROLLING THIN SHEET LIKE MATERIAL

Original Filed June 30, 1923 4 Sheets-Sheet 4

Fig. 5.

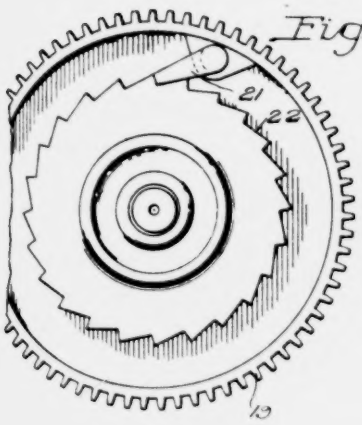

Fig. 4.

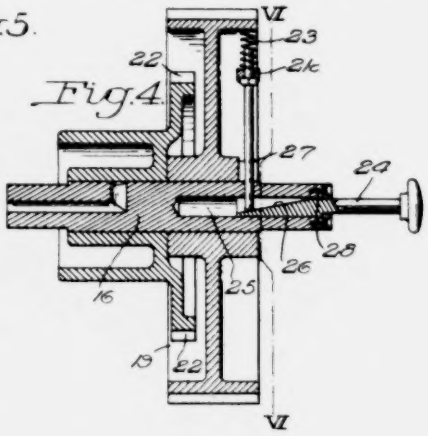

Fig. 6.

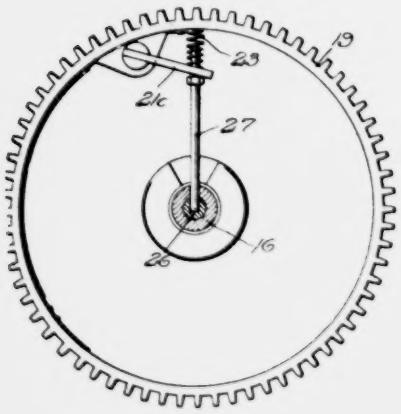

Fig. 7.

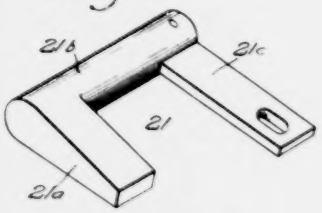

INVENTOR

Abram P. Steckel

by his attys,

Byrne, Stebbins, Rumble & Blackmon

Patented Oct. 21, 1930 1,779,195

UNITED STATES PATENT OFFICE

ABRAM P. STECKEL, OF YOUNGSTOWN, OHIO, ASSIGNOR TO THE COLD METAL PROCESS COMPANY, OF YOUNGSTOWN, OHIO, A CORPORATION OF OHIO

METHOD AND APPARATUS FOR ROLLING THIN SHEETLIKE MATERIAL

Original application filed June 30, 1923, Serial No. 648,761, and in Canada December 28, 1927. Divided and this application filed December 9, 1929. Serial No. 412,742.

This application is a division of my application Serial No. 648,761, filed June 30, 1923. The invention relates to an improved rolling mill and method of rolling whereby superior results are obtained. It applies particularly to the rolling of thin sheet-like material in long lengths. It provides a mill which may be operated at high speeds and permits of rolling metal strips of practically unlimited length. In cold rolling I have successfully operated a mill of the character herein disclosed at speeds up to 1200 feet per minute.

My application above recited and my application Serial No. 200,227, filed June 20, 1927, as a continuation-in-part of said application Serial No. 648,761, relate particularly to a method of rolling wherein a substantial portion of the power required is supplied through tension on the delivered strip. While the invention of the present application is of great value in such combination, the advantages of the present invention may be obtained in rolling wherein the power is not supplied through tension on the delivered strip. It is especially useful in the rolling of metal of great thinness relative to its width.

I provide working rolls having backing rolls of larger diameter and anti-friction mounting for said backing rolls of a character adapted to withstand the rolling pressures encountered and the high speeds which are employed. In a preferred form of the invention the backing rolls are provided with necks which carry the anti-friction bearings, these necks being of sufficient size to withstand the rolling pressure, and the diameter of the backing roll body relative to the diameter of the working roll being of exaggerated size so as to permit of using anti-friction bearings of sufficient size for the conditions encountered. It is important that the bearings be of adequate size and of proper character, and in the form of the invention herein particularly described, roller bearings employing spaced-apart rollers are used.

Prior to my invention it was generally considered impossible to cold roll at speeds in excess of 150 to 200 feet per minute, whereas by the term "high-speed" I contemplate speeds several times this figure, or in the order of multiples of the speeds commonly employed. In hot rolling fairly high speeds have been employed in the manufacture of extremely narrow material. In such case the roll neck bearings have been subjected to only relatively light loads, and such speeds prior to my invention were not applicable to wider mills or to mills where there was marked pressure on the bearings. By my invention the limitations of speed on both hot and cold mills are removed.

In order that the bearings shall be adequate to withstand the rolling pressure over extended periods of time, it is desirable that the backing roll necks be at least as large, and preferably larger, than the working roll bodies. The backing roll bodies are larger than the necks thereof in an amount sufficient to provide adequate space for the anti-friction bearings.

Anti-friction bearings of the proper character will operate continuously with but little temperature rise. They therefore limit the frictional resistance of the backing rolls to rotation below a point where the active pass contour is adversely affected. Where the roller bearings are applied to the backing roll necks they eliminate the heating of such necks, which heat adversely affects the shape of the working roll body. Stated in another way, the anti-friction bearings on the necks are effective for limiting the rise in temperature of such necks to such a point that variations in the contour of the backing rolls are controlled within such limits as to substantially prevent buckling or wrinkling of the thin material passed between the working rolls.

It will be understood that in a backed up mill, the working rolls, being relatively small, are supported by the backing rolls, and any change in the contour of the backing roll will change the contour of the pass, since the work rolls, being relatively small, will adapt themselves under the high pressures encountered in rolling to the contour of the backing rolls. Where the contour of the backing rolls changes to such extent that the ma-

terial is unduly thinned on the edges, wrinkling or ruffling of the edges results. If the material becomes too thin in the middle, buckling of the material is caused.

My invention is also highly advantageous in that the amount of power required is markedly reduced, and the antifriction bearings are so situated that they are amply protected, being a considerable distance removed from the actual pass. They are not affected by grease, scale, dirt or water, if any of these be present at the point where the working rolls engage the material.

If desired, a plurality of stands may be employed. In such case they are preferably arranged in line so that two or more stands will engage the material at the same time. By reason of the fact that the material elongates in each pass the last stands in a continuous mill pass a very long strip in the same length of time as a much shorter strip was passed through the first few stands. By the use of my improved mill these high speeds may be readily attained and this with relatively low power requirements.

A great advantage of the design is that the backing rolls can be given any desired diameter without affecting the power required to operate the mill. It is therefore possible to employ large backing rolls, thus permitting the use of adequate anti-friction bearings, whereas in wide two-high mills for rolling material of substantially uniform thickness there is not sufficient space to accommodate anti-friction bearings which will carry the load; this because in the rolls of a two-high mill the necks of the rolls would have to be so large in order to resist the separating force that there would be insufficient space between them for adequate roller bearings.

I prefer to employ backing rolls whose diameter is at least twice the diameter of the working rolls, as this permits, in a mill of proper design in the practical range of sizes, of using roller bearings of such size that they will last indefinitely under the severe conditions of service. This ratio should be materially increased for high speed cold rolling, because of the much greater pressures encountered. Also, if it is desired to produce a product which is practically free from heavy center or "crown", the ratio of backing roll diameter to working roll diameter should be considerably greater than 2.

For example, in cold rolling steel 7 inches wide by .001 inches thick, I have successfully produced material having a crown less than .0001 inches in a mill having a ratio of backing roll diameter to working roll diameter of 10, the backing rolls being 20 inches in diameter and the working rolls being 2 inches in diameter. I have also successfully rolled steel 16 inches wide by .002 inches thick with a center crown of less than .0001 in a mill where the ratio was 8, the backing rolls being 24 inches in diameter and the working rolls being 3 inches in diameter. Mills with ratios on the order of 2-to-1 show a center crown which is very objectionable in certain cases, although in hot rolling it is generally considered desirable to have a certain amount of crown in the product for the purpose of aiding the material to "track" through the center of the mill.

Roller bearings of the proper type and of adequate size do not wear perceptibly, whereas in strip mill practice where the width of the strip is greater than the narrowest widths the brasses wear at such a rate that it is practically impossible in thin material to keep the several stands in adjustment at high speed.

In the accompanying drawings, illustrating the present preferred embodiment of my invention for rolling with the material under tension both in a single stand and in a continuous mill,

Figure 1 is a diagrammatic view illustrating my improved mill;

Figure 2 is a vertical longitudinal section through such mill;

Figure 3 is a horizontal section taken on the line III—III of Figure 2;

Figure 4 is a vertical transverse section taken on the line IV—IV of Figure 2, and showing the mechanism for actuating a reel employed;

Figure 5 is an end view of the mechanism shown in Figure 4;

Figure 6 is a view showing a portion of Figure 4 and taken on the section VI—VI;

Figure 7 is a detail perspective view showing part of the control mechanism for a reel;

Figure 8 is a diagrammatic view of a continuous mill; and—

Figure 9 is a detail view showing diagrammatically the driving of the working rolls in the mill of Figure 8.

The mill shown in Figures 1 to 7 inclusive comprises working rolls 2 provided with backing rolls 3 of materially larger diameter. These backing rolls are more than strong enough to withstand the force tending to separate the working rolls during rolling, and are provided with large diameter necks 4. As shown in Figure 1, the necks of the backing rolls are of larger diameter than the bodies of the working rolls 2. The necks 4 extend into cases 5 for roller bearings 6. As best shown in Figure 2, the rollers are spaced apart, as, for example, by cages of any desired construction so that the rollers do not rub against one another and are not in danger of getting out of alinement. The cases 5 are carried in the windows of mill housings 7 and the setting of the rolls is controlled by screw-downs 8.

The large diameter of the backing rolls 3 permits of using the large diameter antifriction bearings illustrated in Figure 2,

whereas of the backing rolls were simply strong enough to withstand the spreading force it would be difficult, if not impossible, to fit a long lived bearing into the space thus left available.

As previously stated, the mill herein illustrated is of a character wherein the power for driving is supplied through tension on the delivered strip. In Figure 1, the metal strip S is fed through the mill first in one direction and then in the other, the ends of the strip being connected to reels 9 and 10, these reels being alternately employed as tension and paying out reels. In this form of the invention neither the work rolls nor the backing rolls are driven, the working rolls being in the form of plain cylinders and being supported by the castor rollers 11. The castor rollers 11 for the upper work roll are carried on shafts 12 mounted in brackets 13, while the corresponding castor rollers for the lower working roll are mounted on stop shafts 14 carried in brackets 15.

The mounting and driving of the reels 9 and 10 is best shown in Figures 2 and 4 to 7 inclusive. The reels are carried on shafts 16 journaled in standards 17, these standards being held in spaced relation with the mill housings by spreader arms 18. Each reel is freely rotatable on its shaft 16. Gears 19 are keyed to the shafts 16 and each of them meshes with a pinion 20 connected to any suitable source of power. Each gear 19 is provided with a pawl 21 adapted to mesh with ratchet teeth 22, formed on the reel proper.

The pawl 21 is shown in detail in Figure 7. The pawl finger 21^a is formed integral with a rock shaft 21^b which is journaled in the gear 19 and carries on its outer end an arm 21^c. A spring 23 normally urges the pawl finger into engagement with its ratchet teeth, but when it is desired to disengage the pawl from the ratchet a slide 24, carried in a centrally-bored opening 25 in the shaft 16, is pushed inwardly. The slide is provided with a cam face 26, which face engages the lower end of a push rod 27 engaging the arm 21^c. At its upper end the cam face 26 has a flat portion 28 and when the push rod 27 rides onto this flat face, the pawl is held out of engagement with the ratchet. The construction of each of the reels is the same, and in operation the slides 24 are alternately pushed in and pulled out so as to alternately connect the reels 9 and 10 to the driven pinion 20.

The strip S is connected to the reels in any desired way. In Figure 2 there is shown a leader strip 29 which is connected to the metal strip S at 30. Figure 2 shows a sheave wheel 31 around which the material travels to reach the bottom reel 10.

In the mill shown in Figure 8, there are a plurality of stands such as those illustrated in Figures 1 and 2. Reels are illustrated at 40 and 41 and the material passes from the reel 40 through all of the mills in succession, being finally wound on the reel 41. Motors 42 are provided for each of the roll stands. These motors may be directly connected with the reducing rolls 2 through wobblers or similar flexible couplings 43 to permit of adjusting the rolls. The motors are preferably compound wound where it is desired to drive the mills principally by tension on the delivered strip, these motors having a drooping speed characteristic such that they will divide up the work among themselves after the strip is entered in all the mills. Motors of this character, in which the torque tends to vary inversely with the speed, are well known and need not be described in detail. As illustrated in Figure 8, the shunt winding of each motor is provided with a rheostat 44 for adjusting the motor speed as desired. The motor 45 for the reel 41 is of similar character.

Since the stands are of the character shown in Figure 2 there is ample room to let the neck or the wobblers of the working rolls extend out through the windows of the housings 7.

I have illustrated and described the present preferred embodiment of my invention, both in the single and continuous mills, and wherein the power is supplied principally or entirely by tension on the delivered strip. It will be understood, however, that the invention is not limited to such forms but may be otherwise embodied or practiced within the scope of the following claims.

I claim:

1. In the method of rolling thin sheet or strip material in a mill having working rolls, and backing rolls, of larger diameter, for the working rolls, the steps consisting in limiting the rise in temperature of the backing roll necks to such a point that variations in the contour of the backing rolls are controlled within such limits as to substantially prevent buckling or wrinkling of the thin material passed between the working rolls.

2. In the method of rolling thin sheet or strip material in a mill having working rolls, and backing rolls, of larger diameter for the working rolls, the steps consisting in supplying rolling power through the working rolls and limiting the rise in temperature of the backing roll necks to such a point that variations in the contour of the backing rolls are controlled within such limits as to substantially prevent buckling or wrinkling of the thin material passed between the working rolls.

3. A mill for rolling material of substantially uniform thickness, comprising at least two working rolls provided with backing rolls of larger diameter, the backing rolls having necks of sufficient size to withstand

the rolling pressure, and anti-friction bearings for said backing roll necks, the diameter of the backing roll body relative to the diameter of the working roll being such as to permit of using anti-friction bearings of sufficient size to withstand the rolling pressure and of a character to permit of rolling at speeds high relative to those ordinarily employed.

4. A mill for rolling material of substantially uniform thickness, comprising working rolls provided with backing rolls of larger diameter, the backing rolls having necks of sufficient size to withstand the rolling pressure, anti-friction bearings for said backing roll necks, the diameter of the backing roll body relative to the diameter of the working roll being such as to permit of using anti-friction bearings of sufficient size to withstand the rolling pressure, said anti-friction bearings being of a character to withstand operation at speeds which are high relative to those ordinarily employed, a working roll having a neck extending between the anti-friction bearings of the backing rolls, and means for supplying rolling power through the working roll neck.

5. In the method of rolling thin sheet or strip material in a mill having working rolls provided with backing rolls of larger diameter, the step consisting in maintaining the temperature of the backing roll necks below a point where expansion of a backing roll body induced by heat in the roll necks causes variation and consequent buckling or wrinkling of the product.

6. A mill for rolling thin strips or sheets, having working rolls and backing rolls of larger diameter, the working rolls being substantially uniformly spaced apart and defining a pass of such width and thinness that material heating of the backing roll necks would cause such unequal expansion of a backing roll body as would distort the pass sufficiently to cause buckling or wrinkling of the thin product, and anti-friction bearings for the backing rolls, whereby the temperature of the backing roll necks is maintained sufficiently low to substantially obviate such unequal expansion as would cause such buckling or wrinkling.

7. A rolling mill for material of substantially uniform thickness, the mill being of such width that the available space in a two high mill of the same width would prevent the use of roller bearings of the necessary load carrying capacity, comprising large backing rolls with necks, intermediate working rolls, means for driving the working rolls, and anti-friction bearings for the backing rolls, the anti-friction bearings having outer races encircling the necks and being of such character as to withstand speeds which are high relative to those ordinarily employed, the intermediate working rolls being of sufficiently small diameter to reduce the spreading force in the mill to such point that the anti-friction bearings employed require a smaller space than those which would be required in a two high mill of the same width, whereby the outer races of the bearings for the backing rolls are sufficiently spaced apart to allow room for the driving means.

8. A continuous mill for rolling material of substantially uniform thickness, comprising a plurality of stands having working rolls provided with backing rolls of larger diameter, the backing rolls having necks of sufficient size to withstand the rolling pressure, and anti-friction bearings for said backing roll necks of a character to withstand speeds which are high relative to those ordinarily employed, the diameter of the backing roll bodies relative to the diameter of the working rolls being such as to permit of using anti-friction bearings of sufficient size to withstand the rolling pressure, the stands being so arranged that during at least a portion of the rolling operation the material is being rolled simultaneously in at least two stands.

9. In the method of rolling material of substantially uniform thickness in a mill comprising a plurality of stands having working rolls provided with backing rolls of larger diameter, the steps consisting in passing a piece of material through the mill so that during at least a portion of the rolling operation it is being rolled simultaneously in at least two stands, and maintaining the temperature of the backing roll necks below a point where expansion of a backing roll body induced by heat in the roll neck causes detrimental variation in the product.

10. In the method of rolling thin material of substantially uniform thickness in a continuous mill comprising a plurality of stands having working rolls and backing rolls of larger diameter, the steps consisting in passing material successively through the several stands and limiting the rise in temperature of the backing roll necks to such a point that variations in the contour of the backing rolls are controlled within such limits as to substantially prevent buckling or wrinkling of the thin material passed between the working rolls, such as would be consequent upon variation of the contour of the backing rolls in the several stands.

11. A mill for producing thin, wide, rolled material of substantially uniform thickness, comprising a plurality of stands having working rolls and backing rolls of larger diameter, the mill operating to reduce the material to such thinness that its direction of travel between continuous stands could not be controlled by side guides, and anti-friction bearings for the necks of the backing rolls, whereby the contour of the backing rolls in a stand is not varied by roll neck heating to

such an extent as to interfere with the proper direction of the material in a substantially direct line to a succeeding stand, the stands being arranged to successively act on the material.

12. A rolling mill comprising a series of stands of rolls arranged to successively engage a piece of material to be rolled, each stand being composed of working rolls, backing rolls of larger diameter, and means for applying power to the working rolls, said mill defining successive passes of such width and effective for taking such drafts that the product of the mill is of such width and thinness that slight variations of roll contour such as would be due to variation arising from change of temperature of the backing roll necks would buckle or wrinkle the piece during its passage through the mill, and anti-friction bearings for the backing rolls whereby such buckling or wrinkling is avoided.

13. A mill for rolling material of substantially uniform thickness comprising at least two working rolls provided with backing rolls of larger diameter, the backing rolls having necks of sufficient size to withstand the rolling pressure, and being at least as large in diameter as the diameter of the working roll bodies, and anti-friction bearings for said backing roll necks, the diameter of the backing roll body relative to the diameter of the working roll being such as to permit of using anti-friction bearings of sufficient size to withstand the rolling pressure, said anti-friction bearings being of such character as to permit of rolling at speeds which are high relative to those ordinarily employed.

14. A mill for rolling material of substantially uniform thickness comprising at least two working rolls provided with backing rolls of larger diameter, the backing rolls having necks of sufficient size to withstand the rolling pressure and anti-friction bearings for said backing roll necks, the anti-friction bearings having spaced bearing rollers and being of sufficient size to withstand the rolling pressure over a continued period of time, the diameter of the backing roll body relative to the diameter of the working roll being such as to permit of using such anti-friction bearings.

15. A mill for rolling sheet or strip like material of substantially uniform thickness comprising a working roll of substantially uniform diameter in the body portion provided with a backing roll of larger diameter and anti-friction mounting for said backing roll, the backing roll being of sufficient diameter to permit of using an anti-friction mounting of a character to withstand the rolling pressures encountered and to operate for extended periods of time at speeds which are on the order of multiples of speeds commonly employed in the rolling of such material.

16. A mill for producing thin, wide, rolled material of substantially uniform thickness, comprising a plurality of stands having working rolls and backing rolls of larger diameter, the mill operating to reduce the material to such thinness that its direction of travel between continuous stands could not be controlled by side guides, and anti-friction bearings for the backing rolls, whereby the contour of the backing rolls in a stand is not varied by backing roll heating to such an extent as to interfere with the proper direction of the material in a substantially direct line to a succeeding stand, the stands being arranged to successively act on the material.

17. A mill for rolling sheet or strip-like material of substantially uniform thickness, comprising a working roll of substantially uniform diameter in the body portion, backing rolls of larger diameter and antifriction mounting for said backing rolls, the backing rolls having diameters more than twice the diameter of the working rolls, whereby excessive "crown" in the product is avoided, and the backing rolls being also of sufficient diameter to permit of using an antifriction mounting of a character to withstand the rolling pressures encountered and to operate for extended periods of time at speeds which are on the order of multiples of speeds commonly employed in the rolling of such material.

In testimony whereof I have hereunto set my hand.

ABRAM P. STECKEL.

DISCLAIMER

1,779,195.—*Abram P. Steckel*, Youngstown, Ohio. METHOD AND APPARATUS FOR ROLLING THIN SHEETLIKE MATERIAL. Patent dated October 21, 1930. Disclaimer filed September 23, 1932, by the assignee, *The Cold Metal Process Company*.

Hereby disclaims from the scope of claims 1, 2, 5, 9, and 10, limiting the rise in temperature of the backing roll necks by limiting the mill speeds to those employed prior to my invention for rolling such material.

Hereby disclaims from the scope of claims 6, 11, 12, 14, and 16 any mill having backing roll bearings of a character to limit the mill speeds to those employed prior to my invention for rolling such material.

[*Official Gazette October 18, 1932.*]

DEFENDANT'S SINGLE STAND REVERSING COLD MILL

WARREN MILL No. 44

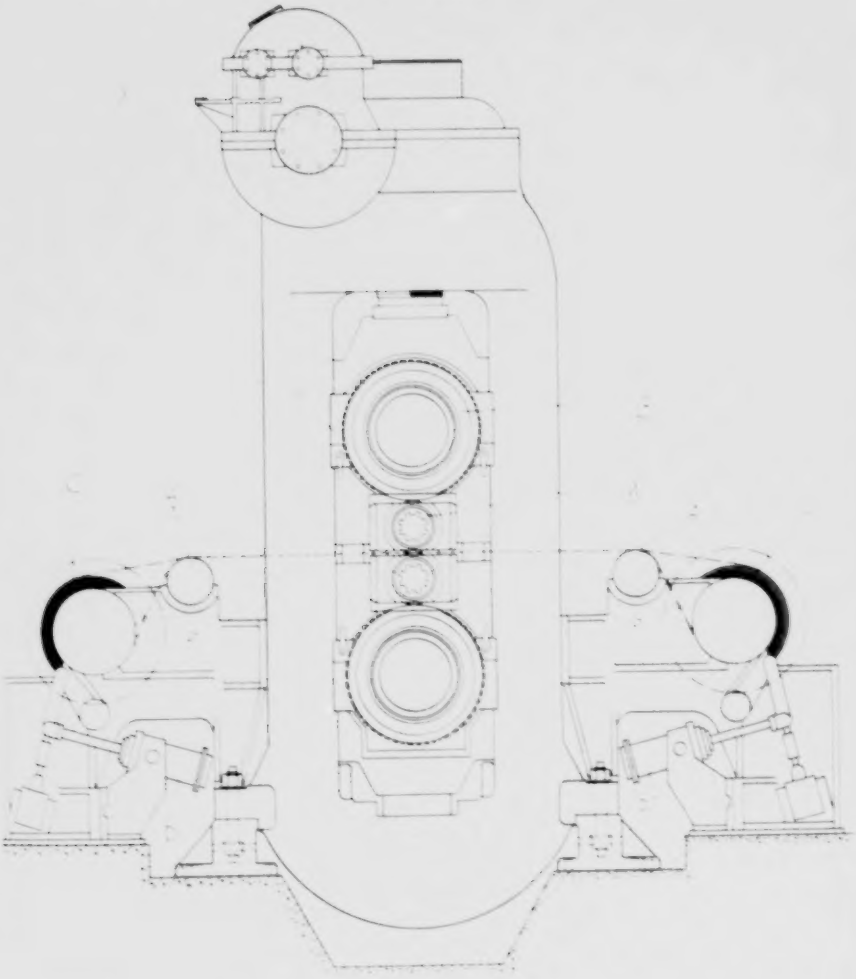

SIDE ELEVATION

DEFENDANT'S SINGLE STAND REVERSING COLD MILL

WARREN MILL No. 44

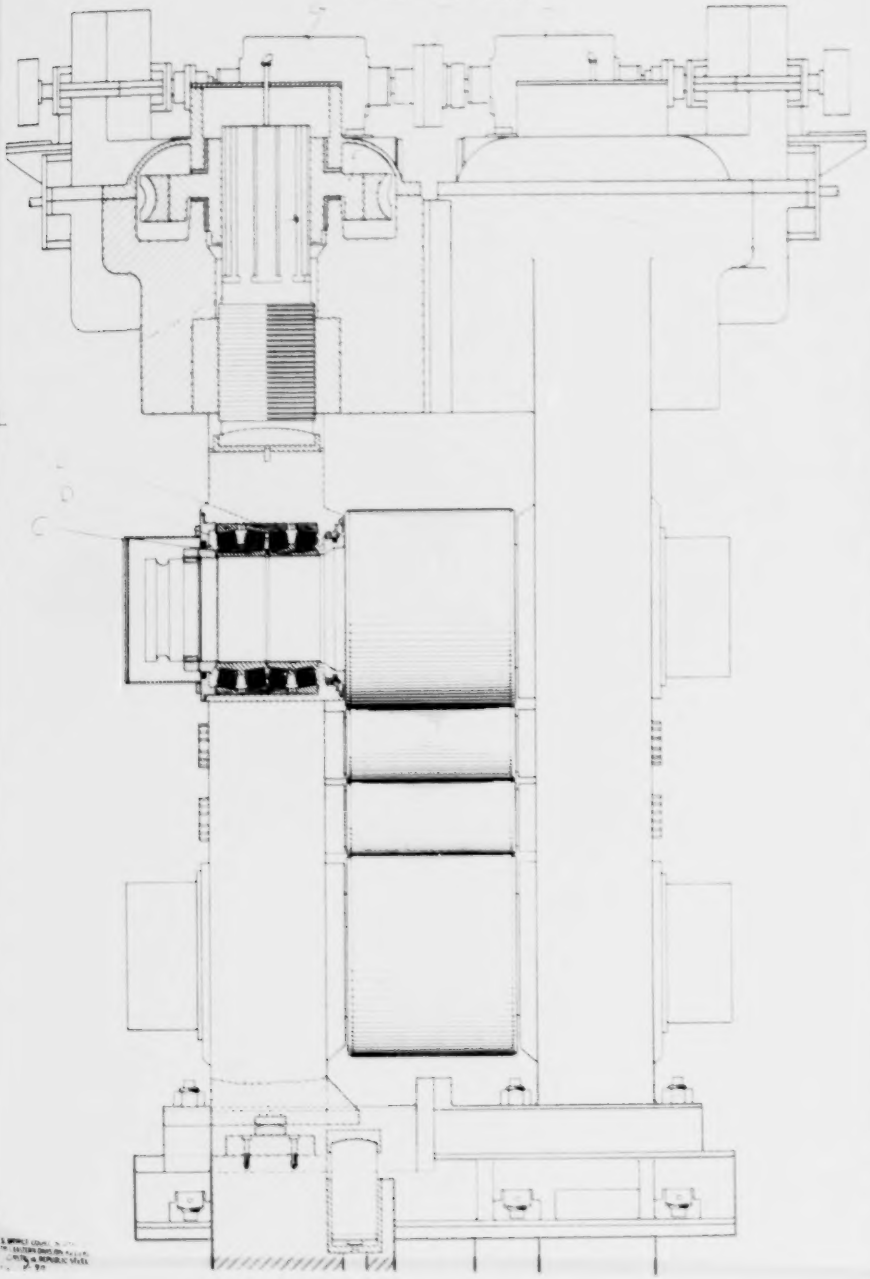

DEFENDANT'S No.1 TANDEM MILL

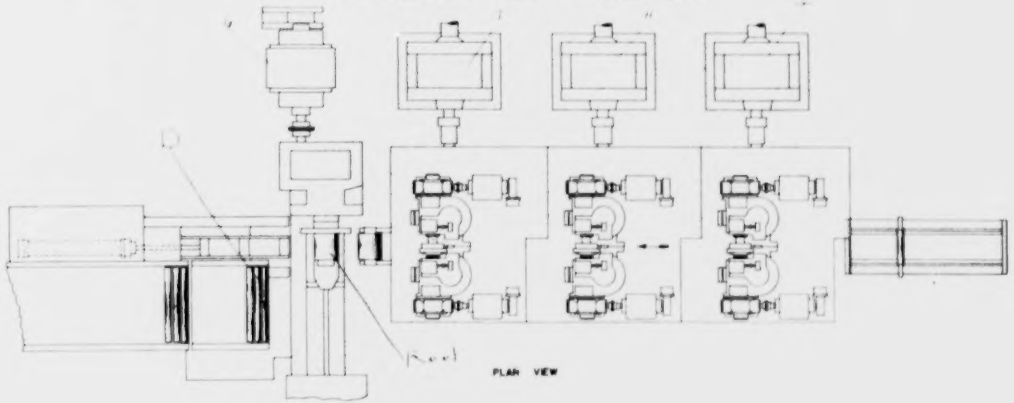

PLAN VIEW

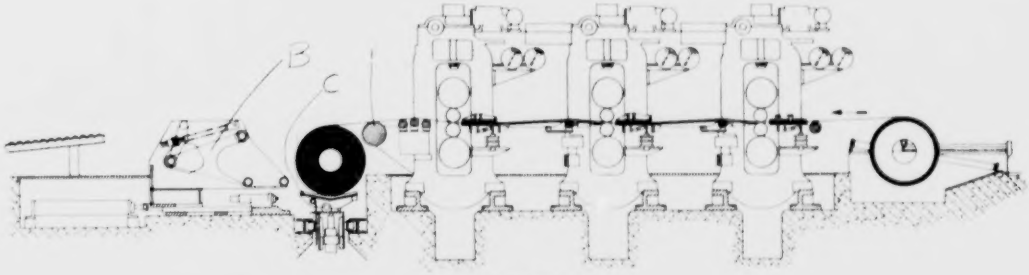

VERTICAL SECTION

Plaintiffs' Exhibit 126

DEFENDANT'S No. 1 TANDEM MILL

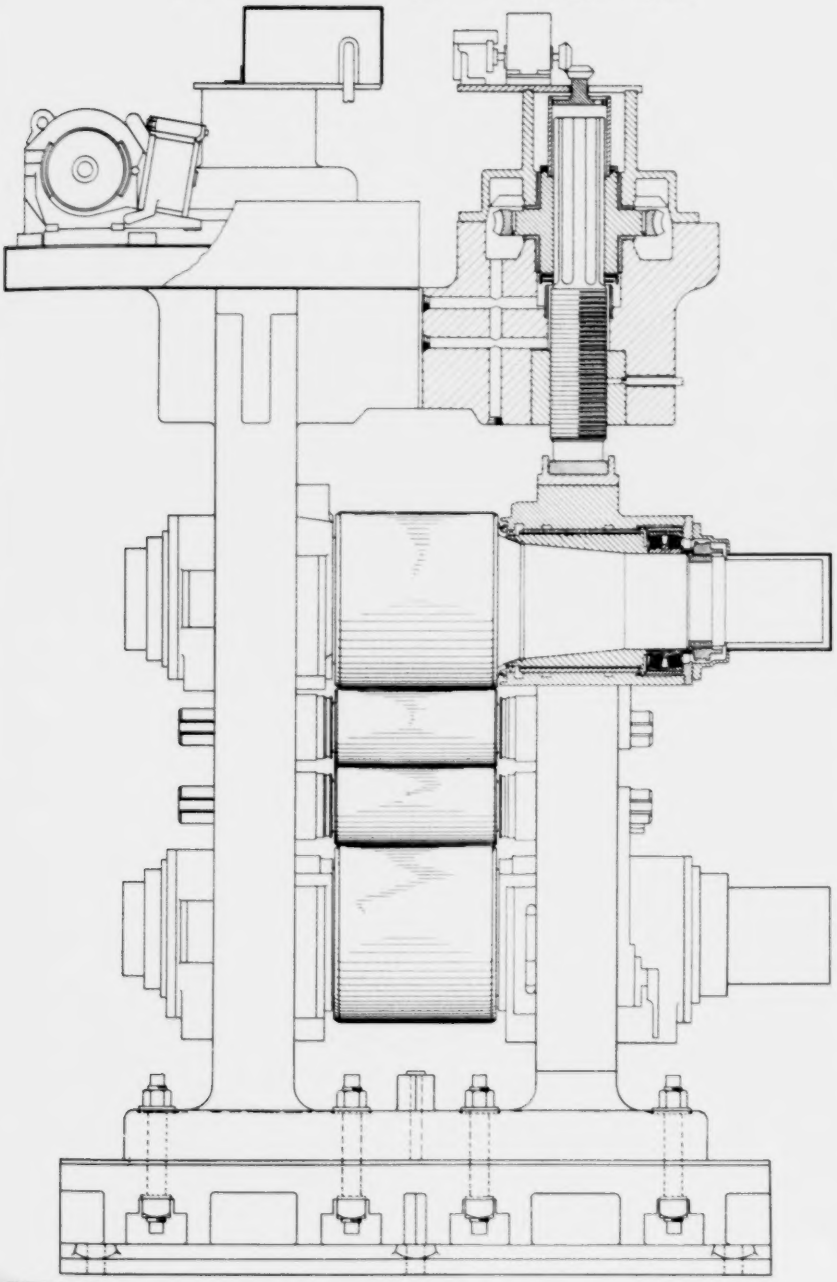

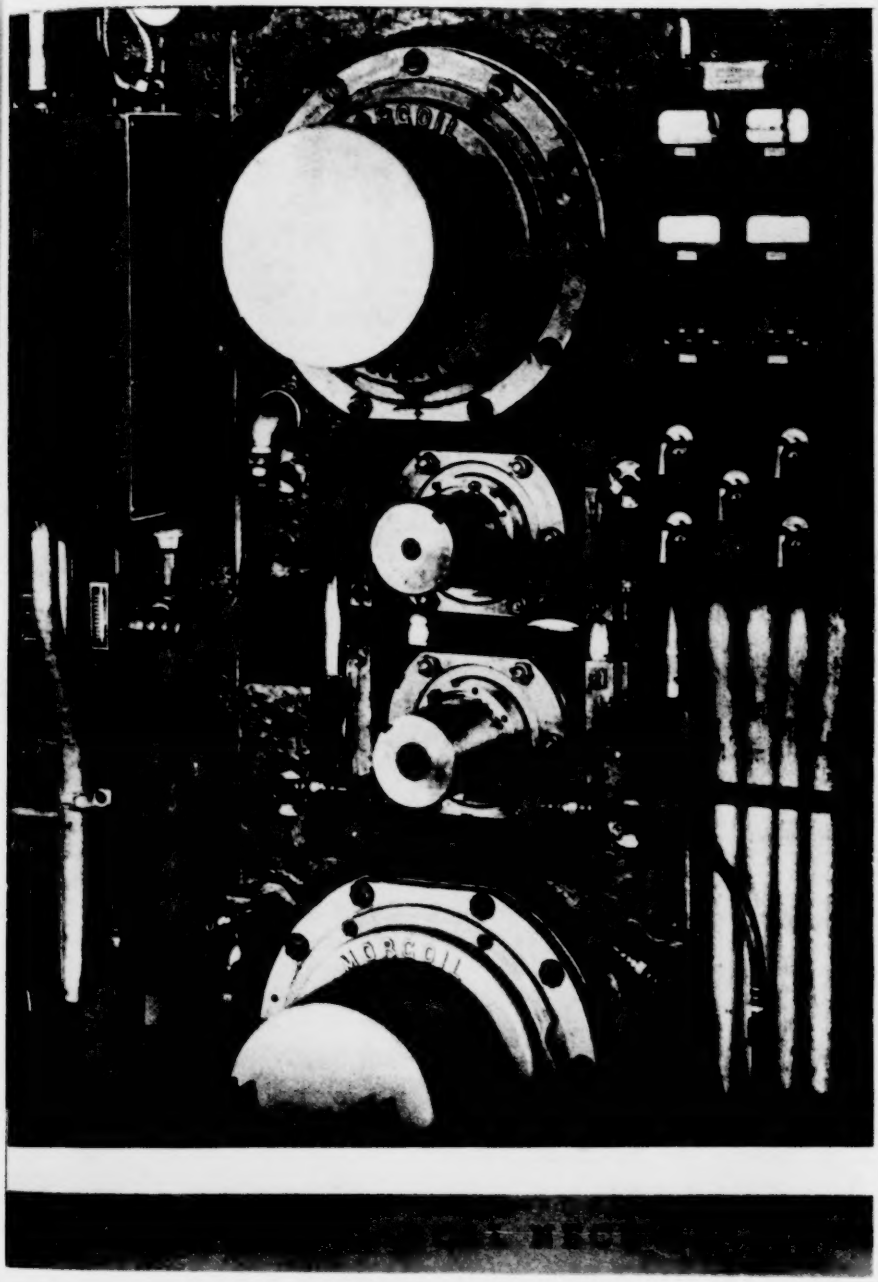

Plaintiffs' Exhibit 278.

Plaintiffs' Exhibit 278, Vol. I, Pages 9, 57, 82, 90-91, 92, 97-98, 132a, 133, 134-35

BILL OF COMPLAINT.

(Filed February 16, 1934.)

IN THE DISTRICT COURT OF THE UNITED STATES,
FOR THE DISTRICT OF NEW JERSEY.

EQUITY No. 4817.

PATENTS NOS. 1,744,016, 1,744,017, 1,744,018 and 1,881,056.

The Cold Metal Process Company

v.

American Sheet & Tin Plate Company and United States Steel Corporation.

The Cold Metal Process Company, a corporation of Ohio, a citizen of Ohio, having a place of business at Youngstown, Mahoning County, Ohio, brings this, its bill of complaint, against American Sheet & Tin Plate Company and United States Steel Corporation, both New Jersey corporations and citizens of the State of New Jersey.

For complaint your orator says:

Plaintiffs' Exhibit 278.

BILL OF COMPLAINT.
(Filed July 7, 1934.)

IN THE DISTRICT COURT OF THE UNITED STATES,
FOR THE DISTRICT OF NEW JERSEY.

No. 4906. IN EQUITY.

PATENT No. 1,779,195.

The Cold Metal Process Company,
Plaintiff,
v.
American Sheet & Tin Plate Company and United States Steel Corporation,
Defendants.

To the Honorable, the Judges of Said Court:

The Cold Metal Process Company, a corporation of Ohio, a citizen of Ohio, having a place of business at Youngstown, Mahoning County, Ohio, brings this its bill of complaint against American Sheet & Tin Plate Company and United States Steel Corporation, both corporations of New Jersey and citizens of the State of New Jersey, and respectfully shows this Honorable Court as follows:

Plaintiffs' Exhibit 278.

ANSWER

(Filed June 20, 1934.)

IN THE DISTRICT COURT OF THE UNITED STATES,
FOR THE DISTRICT OF NEW JERSEY.

EQUITY No. 4817.

PATENTS NOS. 1,744,016, 1,744,017, 1,744,018 and 1,881,056.

The Cold Metal Process Company,
Plaintiff,
v.
American Sheet & Tin Plate Company and United States Steel Corporation,
Defendants.

To the Honorable Judges of the United States District Court for the District of New Jersey:

The defendants in the above entitled cause, answering say:

* * * * * * *

25. Defendants upon information and belief aver that said Steckel patents are invalid because of fraud and deception in the securing of said patents, and particularly in securing claims therein which were invalid for lack of novelty and invention, and because of prior invention and patenting in a Biggert and Johnson Patent No. 1,654,235, dated December 27, 1927.

Further answering, defendants aver that the defendant, American Sheet & Tin Plate Company, pur-

Plaintiffs' Exhibit 278.

chased from United Engineering & Foundry Company of Pittsburgh, Pennsylvania, certain of the mills complained of; that in a suit brought by plaintiff herein against said United Engineering & Foundry Company, reported in 3 Fed. Supp., page 120, the District Court found as its conclusion of law No. 11 that a certain contract of June 20, 1927, between the Cold Metal Process Company (plaintiff therein and herein) and said United Engineering & Foundry Company is a valid and subsisting contract; and that under said contract said United Engineering & Foundry Company had an exclusive right to manufacture, sell and use those mills herein complained of that were purchased by said defendant, American Sheet & Tin Plate Company, from said United Engineering & Foundry Company; wherefore plaintiff herein is estopped from asserting said Patents Nos. 1,744,016, 1,744,017 and 1,744,018 against defendants as to said mills manufactured and sold by said United Engineering & Foundry Company to said defendant, American Sheet & Tin Plate Company.

Plaintiffs' Exhibit 278.

ANSWER

(Filed January 9, 1935.)

IN THE DISTRICT COURT OF THE UNITED STATES,
FOR THE DISTRICT OF NEW JERSEY.

No. 4906. IN EQUITY.

PATENT NO. 1,779,195.

The Cold Metal Process Company,
Plaintiff,
v.
American Sheet & Tin Plate Company and United States Steel Corporation,
Defendants.

To the Honorable Judges of the United States District Court for the District of New Jersey:

American Sheet and Tin Plate Company and United States Steel Corporation, defendants, answer the bill of complaint of The Cold Metal Process Company, plaintiff, as follows, each numbered paragraph referring to the similarly numbered paragraph of the bill of complaint:

* * * * * * *

15. Defendants further aver that plaintiff, The Cold Metal Process Company, has no right to bring this action for infringement since it has granted an exclusive license for the class of mills herein complained of to the said United Engineering & Foundry Company, of Pittsburgh, Pennsylvania, as held by the United

Plaintiffs' Exhibit 278.

States District Court for the Western District of Pennsylvania, as set forth above.

Defendants further aver that the decision of said Court specifically held that mills such as those herein complained of were constructed by the United Engineering & Foundry Company under its license agreement of June 20, 1927, and therefore free from any claim of infringement of the patents in suit.

FINDINGS OF FACT AND CONCLUSIONS OF LAW OF THE DISTRICT COURT IN COLD METAL v. AMERICAN SHEET & TIN PLATE CO. ET AL., EQUITY NOS. 4817 AND 4906.

* * * * * * *

3. Legal title to Steckel patent No. 1,779,195 is in the plaintiff, and is not affected by any outstanding instrument except an agreement between the plaintiff and United Engineering & Foundry Company, dated June 20, 1927, a copy of which is annexed as Exhibit A, and said agreement represents the only agreement between Cold Metal and United Engineering & Foundry Company in respect to said patent.

4. Legal title to Steckel patents Nos. 1,744,016, 1,744,017 and 1,744,018 and McBain patent No. 1,881,056 is in the plaintiff.

Plaintiffs' Exhibit 278.

DECREE

(Filed February 14, 1938.)

IN THE DISTRICT COURT OF THE UNITED STATES
FOR THE DISTRICT OF NEW JERSEY.

(Consolidated Causes.)

No. 4817. IN EQUITY.

The Cold Metal Process Company,
Plaintiff,
v.
American Sheet & Tin Plate Company and United States Steel Corporation,
Defendants.

No. 4906. IN EQUITY.

The Cold Metal Process Company,
Plaintiff,
v.
American Sheet & Tin Plate Company and United States Steel Corporation,
Defendants.

AND NOW, this fourteenth day of February, 1938, these causes came on to be heard on final hearing on bill, answer and proofs taken by both parties, and thereupon it is hereby ORDERED, ADJUDGED and DECREED as follows:

* * * * * * *

7. That the original defendant, American Sheet & Tin Plate Company, has infringed upon said Letters

Patent No. 1,744,016 and upon plaintiff's exclusive rights thereunder by using mills embodying and by operating mills in accordance with the inventions covered by claims 21, 23, 24, 25 and 26 of said letters patent, and that Carnegie-Illinois Steel Corporation, which was substituted by order of this Court on September 14, 1936, for the original defendant, American Sheet & Tin Plate Company, is liable for such infringement.

8. That the defendant, United States Steel Corporation, is jointly liable with the defendant, Carnegie-Illinois Steel Corporation, for such infringement.

9. That a perpetual injunction be issued out of and under the seal of this Court directed to the said defendants, United States Steel Corporation and Carnegie-Illinois Steel Corporation, their directors, officers, agents, servants, employees and attorneys, and each and every one of them, and all those in privity therewith or in active concert and participation with them, enjoining and restraining them and each of them from directly or indirectly making, using or selling, or causing to be made, used or sold, any mills embodying the inventions and improvements covered by claims 24, 25 and 26, or any of them, of said Letters Patent No. 1,744,016, and from practicing a process which infringes claims 21 and 23 of said Letters Patent No. 1,744,016, or either of them, and from in any way whatever infringing upon or causing or aiding others to infringe upon said claims 21, 23, 24 25 and 26 of said Letters Patent No. 1,744,016.

10. That the plaintiff, The Cold Metal Process Company, recover from the defendants, Carnegie-Illinois Steel Corporation, its predecessor, American

Excerpt from Page 51 of Reply Brief.

Sheet & Tin Plate Company, and United States Steel Corporation, the gains, profits and advantages which the defendants and each of them have derived, received, earned, or made, or which have arisen or accrued to them and each of them by reason of the infringement as aforesaid or any infringement of said claims of said patent, or any of them, together with the damages which plaintiff has sustained by reason of any such infringement of the aforesaid claims of said patent.

Excerpt from Page 51 of Respondent's Reply Brief Before the Master

Defendant does not contend that the Morgoil bearing does not come within the broad generic definition of "antifriction mounting" (apart from a defense of indefiniteness) as presented in '016 (see Def. Main Br. pp. 185, 186) but does contend that the Morgoil bearing does not come within the definition of "antifriction bearing" as set forth in '195 as meaning specifically cage type roller bearings (Def. Main Br. pp. 91, 92, 249-252).

APPENDIX C.

IN THE

SUPREME COURT OF THE UNITED STATES

No. .....

OCTOBER TERM, 1956

The Cold Metal Process Company and The Union National Bank of Youngstown, Ohio, Trustee, Petitioners,

v.

Republic Steel Corporation, Respondent.

Affidavit of William H. Webb.

Commonwealth of Pennsylvania
County of Allegheny } ss.:

WILLIAM H. WEBB, being first duly sworn, deposes and says as follows:

1. I am a member of the bar of the Supreme Court of the United States, the Supreme Court of Pennsylvania, and various United States Courts of Appeals and District Courts.

2. I am at present counsel for The Union National Bank of Youngstown, Ohio, Trustee (hereinafter referred to as the "Trustee") and, prior to its dissolution in 1945, was counsel for The Cold Metal Process Company. Since 1935, I have been engaged actively in the patent litigation for Cold Metal or the Trustee relating to the Steckel patents Nos. 1,779,195 and 1,744,016, and

am familiar with all of the litigation since 1931 relating to those patents.

3. In addition to this action against Republic Steel Corporation, the following infringement actions involving patents Nos. 1,779,195 and 1,744,016 are pending in the United States District Courts indicated below:

A. *The Cold Metal Process Company et al. v. Aluminum Company of America,* Civil Action No. 661, Eastern District of Tennessee, Northern Division, filed March 20, 1945.

B. *E. W. Bliss Company v. The Cold Metal Process Company et al.,* Equity No. 5402, Northern District of Ohio, Eastern Division, filed January 20, 1936.

C. *The Union National Bank of Youngstown, Ohio, Trustee, v. E. W. Bliss Company,* Civil Action No. 26,542, Northern District of Ohio, Eastern Division, filed June 1, 1949.

D. *The Union National Bank of Youngstown, Ohio, Trustee, v Greer Steel Company,* Civil Action No. 24,189, Northern District of Ohio, Eastern Division, filed July 23, 1946.

E. *The Cold Metal Process Company v. Detroit Steel Corporation,* Civil Action No. 4730, Eastern District of Michigan, Southern Division, filed March 21, 1945.

F. *The Union National Bank of Youngstown, Ohio, Trustee, v. Bopp Steel Corporation,* Civil Action No. 5663, Eastern District of Michigan, Southern Division, filed April 5, 1946.

G. *The Cold Metal Process Company et al. v. Granite City Steel Company,* Civil Action No. 469, Southern District of Illinois, Southern Division, filed March 19, 1945.

H. *The Union National Bank of Youngstown, Ohio, Trustee, v. Revere Copper & Brass, Inc.,* Civil Action No. 2513, District of Maryland, filed March 20, 1945.

In addition, there is litigation pending between United Engineering & Foundry Company and Cold Metal and the Trustee in the District Court for the Western District of Pennsylvania and in the Court of Appeals for the Third Circuit. The case now before the Court of Appeals is Equity No. 2991 (Appeals Nos. 11,582 and 11,617), decided July 19, 1956; and the case before the District Court is the undetermined counterclaim in that case which was involved in No. 76, October Term, 1955, in this Court (351 U. S. 445).

4. The trials in cases B, C, D, E, F, G, and H mentioned in Paragraph 3 hereof have been held up pending disposition of the case at bar. Case A has been tried and is now awaiting decision by the Master. The trial of case A occupied 100 days, extending over a period of one year, and the record comprises 13,817 pages of transcript and over 1300 exhibits. Cases B to H, inclusive, are substantial cases and the trial of each will require many weeks.

5. Each of cases A to G, inclusive, involves one or more mills having Morgoil bearings and, consequently, the same issue of infringement as that raised in Questions I-A to I-D, inclusive, of the petition for *certiorari*, to which this affidavit is attached, is involved therein.

6. Each of cases D, E, F, G and H listed in Paragraph 3 hereof involves one or more mills manufactured and sold by United Engineering & Foundry Company. Consequently, exactly the same important issues as those involved in Questions II-A to II-D of the petition for *certiorari,* to which this affidavit is attached, will be involved in each of said cases. Those issues have been raised in the answers in cases D, G and H. No answers have been filed in cases E and F, but, in view of the fact that United mills are involved therein, those issues doubtless will be raised.

7. Cases A, B, C, D and G identified in Paragraph 3 hereof involve mills manufactured and sold by either E. W. Bliss Company or Mesta Machine Company. The pleadings in those cases show that the contention is being made in each that United Engineering & Foundry Company is an indispensable party by reason of the 1927 Cold Metal-United agreement and the exclusive rights alleged to have been acquired by United under the patents in suit. Thus, in those cases, essentially the same questions are involved as are involved in Questions II-A to II-D of the petition for *certiorari* to which this affidavit is attached. The counterclaim pending in the District Court for the Western District of Pennsylvania in the *Cold Metal-United* litigation involves the same issues as those presented in Questions II-A to II-D of the petition to which this affidavit is attached.

8. In my opinion, a decision by this Court on the issues raised in the accompanying petition will greatly simplify the above-identified actions and may render trial of some of them unnecessary, thus saving a tre-

mendous amount of time for numerous litigants and various Courts.

WILLIAM H. WEBB

Sworn to and subscribed before me, a notary public in and for the Commonwealth and County aforesaid, this 23rd day of August, 1956.

MARY C. SHANAHAN
Notary Public

[Notarial Seal]

32/18

FILED
SEP 27 1956
JOHN T. FEY, Clerk

IN THE

Supreme Court of the United States

No. 358

OCTOBER TERM, 1956

THE COLD METAL PROCESS COMPANY and THE UNION NATIONAL BANK OF YOUNGSTOWN, OHIO, TRUSTEE,

Petitioners,

vs.

REPUBLIC STEEL CORPORATION,

Respondent.

RESPONDENT'S BRIEF IN OPPOSITION TO PETITION FOR WRIT OF CERTIORARI

DRURY W. COOPER
233 Broadway
New York, N. Y.
Counsel for Respondent

JOHN N. COOPER
ROBERT E. ISNER
233 Broadway
New York, N. Y.
Of Counsel

INDEX

	PAGE
Questions Presented	1
Statement	3
Statement as to Questions IIA to IID	3
The Patent Application Status	3
The Commercial Status	4
The Nature of the Agreement	5
Asserted Practice, Construction and Conflict	13
Reasons Why This Petition Should Not Be Granted As to Questions IIA to IID	18
Statement as to Questions IA to ID	19
Reasons Why This Petition Should Not be Granted As to Questions IA to ID	30
Conclusion	32
Appendix A	
Portions of Master's Report	1a
Portion of the Opinion of the District Court	35a
Affidavit of John N. Cooper	49a

TABLE OF CASES

PAGE

Burr v. *Duryee* (1863), 68 U. S. (1 Wall.), 531 . . . . 27, 30

Cold Metal Process Company v. *Carnegie-Illinois Steel Corporation* (1938), 22 F. Supp. 75; (C. A. 3, 1940), 108 F. 2d 322 . . . . . 15, 16, 17

Cold Metal Process Co. v. *United Engineering & Foundry Co.* (1939), 107 F. 2d 27 . . . . . 13, 16, 17

Cold Metal Process Co. v. *United Engineering & Foundry Co.* (1955), 132 F. Supp. 597 15

Cold Metal Process Company et al. v. *United Engineering & Foundry Co.* (1956), 110 USPQ 332 . . . 15-16, 32

Edison Electric Light Co. et al. v. *Peninsular Light, Power & Heat Co. et al.* (1900), 101 Fed. 831 12

Faulkner v. *Gibbs* (1949), 338 U. S. 267 28

General Electric Co. v. *Wabash Appliance Corp., et al.* (1938), 304 U. S. 364 27

Grazer Tank & Mfg. Co., Inc., et al. v. *Linde Air Products Co.* (1949), 336 U. S. 271 27

Halliburton Oil Well Cementing Co. v. *Walker, et al.* (1946), 329 U. S. 1 26-29

Holland Furniture Company v. *Perkins Glue Company* (1928), 277 U. S. 245 27

Lazelher v. *Hamilton* (1888), 124 U. S. 1 18

Mackay Radio & Telegraph Co. v. *Radio Corporation of America* (1938), 306 U. S. 86 27

Steam Stone Cutter Co. v. *Shortsleeves* (1879), Cas. No. 13,334, 22 Fed. Cas. 1168 12

United Engineering & Foundry Co. v. *Cold Metal Process Co.* (1950), 92 F. Supp. 596; rev'd. 190 F. 2d 217 14-15

Westinghouse v. *Boyden Power Brake Company* (1897), 170 U. S. 537 27

IN THE

Supreme Court of the United States

No. 358

October Term, 1956

THE COLD METAL PROCESS COMPANY and THE UNION NATIONAL BANK OF YOUNGSTOWN, OHIO, TRUSTEE,
Petitioners,

vs.

REPUBLIC STEEL CORPORATION,
Respondent.

RESPONDENT'S BRIEF IN OPPOSITION TO PETITION FOR WRIT OF CERTIORARI

QUESTIONS PRESENTED

Petitioners' two sets of questions require consideration in reverse order since questions IA to ID are moot and will remain so unless and until this Court considers questions IIA to IID appropriate for review and reverses the holding below.[1] Even then, questions IA to ID will remain moot in so far as patent '195 is concerned, since questions IIA to IID raise no controversy relative to that portion of the judgment below holding that the accused mills are immune to a charge of infringement of that patent. (Pet. 4-6; see Pet. App. A, 44a-45a.)

Questions IIA to IID (Pet. 4-6) do not state issues properly presented or supported by the decisions and find-

[1] Petitioners, hereafter will be referred to as "Cold Metal." Respondent will be referred to as "Republic."

ings below. The basic and underlying issue, from the beginning, has always been as the Master put it (Res. App. A, 13a):[1]

> "* * * the underlying issue here is whether defendant's accused mills or any of them come within the scope and protection of United's exclusive license as granted by the 1927 agreement. If so, such mills necessarily are freed by the license from Cold Metal's charges of infringement, as Cold Metal itself concedes (Ex. D-43, p. 20, D-117, p. 17)."[2]

The only question properly presented on this issue on the facts in this case is: Whether or not United and its customer Republic can be prohibited from enjoyment of the full scope of the express grant contained in the 1927 exclusive license agreement between Cold Metal and United by the '016 patent.

Questions IA to ID also fail to state issues that are properly supported or presented by the decisions and findings below. Apart from the inextricable commingling of the two patents therein in complete derogation of the fact that Cold Metal's own recognition that Republic is licensed under patent '195 renders all matters relating to that patent moot, the questions fail to meet or even recognize the determining fact that the controlling ground of the decision below lay in an express limitation of the scope of the terms "anti-friction backing" and "anti-friction mounting" to save the claims from invalidity and that the Morgoil bearings did not and could not come within the scope of the claims as so limited.

---

[1]Appendix A to this brief is hereafter designated Res. App. A. For convenience those portions of the Master's report and the District Court's opinion dealing with the license issue are reproduced therein at pages 1a-34a and 35a-48a respectively.

[2]These exhibits appear in Volume VIII of the Joint Appendix, pp. 122, 220 respectively.

STATEMENT

Cold Metal's statements as to the two sets of questions are not accepted. These statements are so lacking in accuracy through omission of facts material to the issues as presented and decided below, and by inclusion of purely argumentative assertion as substitute for fact, that denial of the petition as to both sets of questions is justified under Rule 23-4.

The reasons for denying the petition as to each set of questions will follow immediately after the statement relating to each question. The two sets of questions relate to different factual situations.

Statement as to Questions IIA to IID

A restatement and amplification of the material facts will show that the concurrent findings and conclusions below do not present or support the questions posed or afford any appropriate ground for review.

The situation of the parties prior to the execution of the agreement had a double interrelated aspect, one relating to the status of, and the subject matter covered by, their patent applications, and the other relating, as it does in every patent license, to the commercial situation in regard to the manufacture, sale and use of the subject matter of both parties' applications.

The Patent Application Status

In 1927 Cold Metal and United each had pending applications relating to 4-high rolling mills being prosecuted by the same attorneys. Cold Metal's 1923 Steckel application originally included three claims directed to the 4-high anti-friction bearing mill *per se*. These claims were rejected for lack of invention and, on April 6, 1926, were cancelled

with the result that all the remaining claims of that application were addressed to the combination of the mill and tension (Pet. App. A, 30a; J. App. I, 348, 228-229).

United's Biggert & Johnson application had been filed April 20, 1926 and the claims also covered the 4-high antifriction bearing mill *per se* (Pet. App. A, 30a; Res. App. A, 4a, 37a). As of June 20, 1927 all the claims stood rejected on the ground that there was no invention in putting "antifriction roller or other bearings" on the backing rolls of the old 4-high mills (Ex. D-2, p. 455).

The Commercial Status

When Cold Metal's application was filed in 1923, Steckel had built and was operating a 4-high all pull roller bearing mill.[1] In 1926 two more all pull mills were built. Early in 1927 these mills were first disclosed to the public and Cold Metal was getting ready to exploit and sponsor this type of mill (Pet. App. A, 30a; Res. App. A, 42a-43a; J. App. II, 190). United, on the other hand, had made, sold and installed a 4-high antifriction bearing mill at Rome, New York, by December of 1925 in which the work rolls were driven directly by a large motor and a reel was provided for maintaining tension on the strip to pull the sheet flat and wind it into a coil (Pet. App. A, 30a; Res. App. A, 4a, 37a). By about June 1927 United had sold or had on order some sixty-three 4-high roller bearing mills of this type (Ex. D-2, pp. 473-5).

It was under these circumstances that the 1927 license agreement was formulated by the common attorneys at the parties' request after discovery that certain subject matter was common to both applications. The parties were separately advised that the conflict involved "the common

[1]The "all pull" type of mill is driven entirely by tension.

subject matter" of 4-high mills and, at the time of signing the agreement, further disclosed that this common subject matter related to the "4-high mill with roller bearings on the backing rolls" (Res. App. A, 4a-5a, 37a-38a; 62 F. Supp. 127, 131, first col.).

The Nature of the Agreement

The 1927 agreement (Pet. App. B, 49a) consists of two "whereas" clauses and four separately numbered paragraphs containing various covenants. The whereas clauses recognize (1) that both applications related to "4-high rolling mills", and (2) that the possibility existed of securing claims to the subject matter common to both parties' applications (which was, in fact, the 4-high anti-friction bearing mill). In paragraph 1 the parties agreed to immediately hold a conference with the law firm which would be authorized to suggest claims covering the subject matter common to both parties' applications "which it is understood are not at the present time being presented in Cold Metal's applications", together with a "plan for securing the allowance of such claims". In paragraph 2 Cold Metal agreed that it would not present in its application claims of the scope suggested or "directed to the subject-matter common to both parties' applications, if such claims are broader or of different scope" than the claims then being presented in Cold Metal's application, except with the "agreement and cooperation of United". In paragraph 3 Cold Metal agreed to grant the exclusive license therein specified to United when and if any claims to the common subject matter were granted in any patent issued on Cold Metal's application. Paragraph 4 is immaterial to any issue here presented.

Thereafter, and in pursuance of the plan provided for, and with the consent of the parties, the suggested claims

were prosecuted in United's application because of United's already experienced commercial success (Pet. App. A, 30a-31a; Res. App. A, 4a-5a, 37a-38a). In December 1927 United secured a patent with claims covering the 4-high antifriction bearing mill and the claims were copied into Cold Metal's '016 application with a request for an interference. United did not contest the interference and the claims were awarded to Cold Metal. Following a requirement of division, the copied claims were ultimately issued in patent '195 (Pet. App. A, 31a; Res. App. A, 5a-6a, 38a). The provisions of paragraphs 1 and 2 of the 1927 agreement were thus carried out in that the claims directed to the "subject-matter common to both parties' applications" (i.e. the 4-high antifriction bearing mill) came into Cold Metal's patent "with the agreement and cooperation" of United (i.e. by United's forbearance to contest the interference). When '195 issued, the exclusive license referred to in paragraph 3 "came into being" (Res. App. A, 6a, 38a). In view of the circumstances existing at the time of the execution of the agreement, it was implicit if not explicit that Cold Metal would ultimately obtain the claims to the common subject matter for, as the Court of Appeals noted (Pet. App. A, 31a), the agreement had been executed "Anticipating this result". The only problem that the parties had faced from the beginning was the Patent Office's continued refusal to allow claims to the mill *per se* for lack of invention and the "plan" successfully used United's "commercial success" to overcome the ground of rejection and cause allowance of the claims.

Paragraph 3 of the agreement reads:

> "3. When and if such claim or claims to common subject-matter are granted in any patent issued on Cold Metals' applications, Cold Metals shall grant to United a license to make, use and sell rolling mills

> under such claim or claims, which license shall be exclusive to United for 4-high hot mills and for 4-high cold mills, in which the major portion of the power required by a roll stand is supplied to the rolls directly and not through tension exerted on the material for pulling it through the rolls; Cold Metals, however, reserving the right to make or have made for its own use and to use in its own plant or plants such hot and cold mills, * * *".

This provision has been uniformly construed by the Master and both Courts below (Res. App. A, 13a-14a, 21a, 40a, 44a; Pet. App. A, 35a-37a). The Circuit Court determined (Pet. App. A, 35a-36a):

> "The license agreement specifically stated that Cold Metal should grant United a license to make, use and sell rolling mills under claims to the common subject-matter granted in a patent issued on Cold Metal's application. However the exclusive license was to cover not only the 4-high hot mills and 4-high cold mills described in '195, but also mills in which the major portion of the power required was supplied to the rolls directly and not through tension. By necessary implication this provision included mills in which some power, but less than the major portion, was supplied by tension. It is significant that prior to this time United had concentrated upon the building of 4-high rolling mills for the rolling of both hot and cold strip, with tension reels which supplied only a small amount of power to the operation. Cold Metal at the same time was particularly interested in the all-pull mills in which the entire power was derived from tension on the strip. Under these circumstances the license agreement was deliberately framed.
>
> "The Master and the District Court both found that the agreement constituted a division of the tension field. They considered that Cold Metal was

> then beginning to enter that part of the field in which the entire, or a major part, of the power applied to the operation came from tension on the strip. United was interested in mills in which small amounts of power were supplied through tension. This proper appraisal of the underlying reasons for the specific provisions of the agreement seems to us to take account of the respective business needs of the parties and their expectations as to the kind of mills which at the time they intended to erect and sell."

Cold Metal, although paying lip service to the actual provisions and terms of the grant, disregards their express effect by partial and twisted characterizations and speculation about their meaning and by unfounded and wholly unsupported assertions relative to purported intentions of the parties (Pet. 19, 20-1) in complete derogation of the concurrent findings below. Paragraph 3 provided, as all tribunals below noted, "a license to make, use and sell rolling mills under such claim or claims, which license shall be exclusive to United for 4-high hot mills and for 4-high cold mills" operated in a defined way, i.e. with up to 50% of the power required being supplied by tension. The express and full scope of the grant was thus in plain terms for the 4-high antifriction bearing mill of the '195 claims employing tensions in the range of 0 to 50% and, as held by all courts below, was for specific mill structures operated in a defined way (Res. App. A, 13a-14a, 44a; Pet. App. 35a-36a).

The concurrent findings below recognized that the backed up mill *per se* covered by the '195 claims is also included and covered in the '016 claims, i.e. that in so far as the mill structure is concerned both patents include the same thing (Res. App. A, 13a-14a, 20a, 42a; Pet. App. A, 26a-27a). The concurrent findings below

show also that the accused mills were driven with the major portion of the power required being supplied to the rolls directly, and that such operations come within both the language of the express grant and the '016 claims (Pet. App. A, 34a, 35a; Res. App. A, 13a-15a, 20a, 47a). Stated simply therefore, and in so far as the accused mills and their operations are concerned, the concurrent findings below show that the express grant of paragraph 3 and the '016 claims are coextensive in scope in covering those mills with tension drives below 50%.

This is graphically illustrated in Chart I on the pull-out page at the end of the appendix hereto. Shown thereon is one of the accused mills that was actually driven with 70% of the power supplied directly to the work rolls and the remaining 30% being supplied through tension.

Paragraphs Nos. 1 to 4, as a group, are referenced to a red rectangle roughly enclosing what is known as the mill *per se*, and shows that what is described in each of those paragraphs is physically included in said rectangle. The structure enclosed in red was held to respond to the claims of patent '195.

Paragraph No. 6, which, in its entirety, sets forth pertinent and applicable portions of '016 claim 26, has the first clause thereof referenced to the red rectangle enclosing the aforesaid 4-high antifriction bearing mill *per se* and shows the coincidence thereof with the '195 structure as concurrently found below.

In addition the chart is provided with a blue rectangle enclosing the mill *per se* and one of the reels. This blue rectangle is referenced to paragraph No. 5 which sets forth the express grant and also to paragraph No. 6 in its entirety. It is readily apparent that the express grant of paragraph No. 5 covers the 4-high antifriction bearing mill driven as indicated. This same mill and this same method

of drive also is embraced within the coverage of claim 26 (as well as other '016 claims in suit) as construed by the courts below to be infringed by tension drives of below 50%.

Thus this chart illustrates with clarity and simplicity the fact that the licensee cannot use and enjoy the full scope of the license grant, i.e. the 4-high antifriction bearing mill responding to the '195 claims and operated within the defined field, i.e. tension up to 50%, without also coming within the scope of the '016 claims as they have been interpreted below.

This crucial fact was recognized by all tribunals below (Pet. App. A, 37a; Res. App. A, 44a). With respect thereto the Master stated (Res. App. A, 20a-21a):

> "As a result, it is apparent that United cannot possibly obtain the full use and enjoyment of the exclusive license granted to it by Cold Metal, and to which it is entitled by the express terms of the grant, namely, the right to make, use, and sell mills embodying the common subject-matter claims of patent '195, in which the major portion of the power is supplied to the rolls directly and not through tension, without trespassing upon one or more of the claims of patent '016, notably claims 11, 12 and 24 through 26, which, as previously mentioned, cover the operations of cold mills that respond fully to the express terms of the grant."

Cold Metal attempts to avoid the controlling effect of the above findings by raising the immaterial issue (Pet. 5, 21, 25) that some rights under '195 can be enjoyed without infringing '016. The immateriality of this issue was recognized and disposed of below. The District Court stated (Res. App. A, 44a):

> "There is no merit in plaintiffs' argument that the two foregoing cases are not applicable to the

> instant situation. Plaintiffs maintain that an implied license was declared to exist in those cases because such a finding was necessary to enable the licensee to make full use of the rights conferred under these agreements, but that in the instant case United was able to exploit patent '195 without invading the tension subject matter of patent '016. Although this is true as far as it goes, it begs the *crucial* question which must be decided—*could United exploit the rights granted under the license agreement without the right to use the tension subject matter of '016.*' By the express terms of this agreement United was granted the right to practice the art disclosed in certain claims for the purpose of manufacturing, using and selling a specific type of mill. Since it is impossible to make, use and sell such a mill without infringing the tension subject matter of another of Cold Metal's patents, it is necessary to confer upon the licensee an immunity under this other patent, so as to breathe life into the rights acquired through the license." (Emphasis ours).

The Court of Appeals ruled similarly (Pet. App. A, 37a):

> "The fact that the machines could practice the inventions of '195 without trespassing on '016 is not decisive. The exclusive license granted covered the '016 operation where amounts of less than 50% of the power were supplied by tension."

In the light of the concurrent findings below and in view of the particular and clear language used in the 1927 agreement, no amount of speculation and baseless assertion as to whether some phrase was a limitation or an enlargement, or transmuted something into something else (Pet. 20, 21, 25), can obscure these simple facts: (1) the express license granted was specifically for 4-high mills embodying the '195 claims and operated with up to 50%

tension (and this Cold Metal cannot and does not deny); (*2*) that Republic's accused 4-high mills embody the '195 claims[1] and operate with less than 50% tension; and (*3*) that the operations coming squarely within the scope of the grant were held below to infringe '016. Under these circumstances the express grant carried with it everything necessary for the full enjoyment thereof and carried with it not only immunity from a charge of infringement under the '195 patent (as Cold Metal concedes), but also immunity from the '016 patent in so far as that patent might prevent full enjoyment of the license grant.

Judge Lurton, in *Edison Electric Light Co. et al.* v. *Peninsular Light, Power & Heat Co. et al.* (C. A. 6, 1900) 101 Fed. 831 (a case referred to by Cold Metal in its brief below as "One of the leading cases on this doctrine") laid down the principle that "a grant necessarily carries with it that without which the thing granted cannot be enjoyed" and that which passes by implication "must be incident to the grant, and directly necessary to the enjoyment of the thing granted" for the "foundation of the maxim lies in the presumption" that the grantor intended "to make his grant enjoyable" (p. 836, 101 Fed.).[2]

---

[1]The Morgoil bearing mills were in fact excluded from the '195 claims (and the '016 claims as well) by the courts below.

[2]As Judge Lurton noted, this is a "general principle of law". As noted in the early case of *Steam Stone Cutter Co.* v. *Shortsleeves* (1879), Fed. Cas. No. 13,334, 22 Fed. Cas. 1168, the rule is founded on the common law rule that the presumed intention of a grantor is to make a grant effective, and it applies to grants of all kinds including those under patents. Further in this connection, it is to be noted that, in its main brief on appeal in the Court of Appeals, on page 35, Cold Metal stated:

> "We recognize that, under certain circumstances, the granting of license rights in respect of a machine will carry with it, by necessary implication, rights under other patents of the licensor."

Asserted Practical Construction and Conflict

Apart from the posing of an erroneous issue as discussed above, Cold Metal urges review by (a) assertion of error in the failure of the court below "to give effect to the practical construction" of agreement by the parties (Pet. 23), (b) the assertion of a direct conflict with holdings in the Third Circuit in that the decision below is "contrary to and disregards" the holdings in the United-Cold Metal litigation, and that it is contrary to the decisions "in the *Steel Corporation* litigation" (Pet. 23-24). These assertions are without foundation and are attempted to be supported only by isolated statements taken out of context from former opinions, garbling, and misleading argumentation. The contentions here asserted have been repeatedly rejected after study of the opinions in those litigations by the Master, the District Court, and the Court of Appeals (Res. App. A, 7a-12a, 23a-24a, 44a-45a, 47a; Pet. App. A, 37a-38a, 39a-42a).

As to the so-called "practical construction" and conflict with the *United* litigation, the fact is, as determined by the Court of Appeals both in its main opinion and in its opinion on the petition for rehearing that (Pet. App. A, 38a, 40a, 42a):

> "Cold Metal has never attempted to enforce Patent '010 against United. This is the first occasion on which immunity as to '010 could be formally claimed.
>
> * * * * *
>
> "The District Court concluded, we think correctly, that in none of the prior litigation between Cold Metal and United was it ever adjudged that United did not acquire immunity under '010 through the license agreement.
>
> * * * * *

> "The holding of the District Court that Cold Metal has never sought to enforce '016 against United and hence gave United no reason to plead immunity under the license contract clearly is correct."

The Master and the District Court similarly found (Res. App. A, 11a-12a, 45a).

At page 24 of the petition there is a reference to Judge Follmer's opinion (92 F. Supp. 596, 599-600). This opinion deals with an ancillary complaint or counterclaim filed in 1949 by United in the accounting proceeding asserting that it and its customers had rights and immunities under the '016 patent. Cold Metal omits mention that Judge Follmer's dismissal of this ancillary complaint or counterclaim was reversed by the Court of Appeals in 190 F. 2d 217, and that Judge Follmer's dicta was effectively disposed of at pages 221-2 as follows:

> "The fact that United, until the filing of the counterclaim, insofar as the record before us shows, had not claimed any rights under patent '016, is not necessarily dispositive of the issue as to whether United has any rights thereunder.[1]
>
> * * * * *
>
> "If, as has been demonstrated, United must pay the equivalent of royalties or license fees to Cold Metal

---

[1]Cold Metal affirmatively conceded before the Master that any failure of United in asserting its rights did not and could not deprive this defendant of its defense (R. 9511):

> "THE MASTER: Wait, let's examine that a minute. You mean to say then that if it should be found here as a fact that United had certain rights under the June 20, 1927 agreement which it failed to assert in other actions involving Cold Metal, would you say that the failure of United to assert these rights deprives a customer of United, and in this particular case Republic, of the right to so assert these rights?
>
> "MR. WEBB: No, not one bit, your Honor."

> under the 1927 contract, and United has the equivalent of an exclusive license under the two patents ['195 and '016] within the purview of the 1927 agreement, United would be entitled to counterclaim against Cold Metal for the sums, if any, which Cold Metal has received from users of four-high mills within the scope of the 1927 agreement."

At page 30 of the petition there is quoted a portion of still another opinion (132 F. Supp. 597, 603) in this lengthy United accounting proceeding. The quoted statement does not support the proposition that Cold Metal seeks to establish, namely that United did not receive immunity from charges of infringement of the '016 patent with respect to mills operated within the full scope of the grant, i.e. with up to 50% tension. As the quoted statement indicates, that opinion categorically states that the '016 patent "has not been involved in this litigation". This being true, it is difficult to see how any statement that it is "not a subject of the 1927 agreement" is justified. The latter was properly termed dictum by the court below which also expressly noted, as had the District Court, that the '016 patent was not the subject of this accounting proceeding (Pet. App. A, 42a).

The Court of Appeals for the Third Circuit in 110 USPQ 332 in affirming Cold Metal's judgment against United for royalties (*inter alia*, for the very mills here accused, Res. App. A, 27a) agreed with the Circuit Court below in the case at bar, effectively overruled the obvious dictum, and destroyed the inference that Cold Metal seeks to draw from it by holding as follows at page 339:

> "We do not draw from its opinion a conclusion that United had no rights at all under patent '016, but only that the issue of its rights under that patent was not involved in the proceedings now before us

> and accordingly was not determined in these proceedings."

The statements made by the Third Circuit Court of Appeals in the *Cold Metal-United* litigation (107 F. 2d 27, 30), quoted at page 23 of the petition, do not support the assertions that United took a position in the *Cold Metal-Steel Corporation* litigation (22 F. Supp. 75, aff'd 108 F. 2d 322) that United and its customers "obtained no rights under patent '016" (Pet. 22, 23, 25, 30). The observation that "This appears", etc., was in reference to an entirely different issue than is presented here.[1] There is certainly no justification or basis to expand the quoted statements or any other statement in the opinion to a holding or as evidence that United took the position Cold Metal asserts it did.

It will be well to note, at this point, the significant facts about the *Cold Metal-Steel Corporation* litigation which dispose of all Cold Metal's contentions of alleged conflict with respect thereto. District Judge Fake (22 F. Supp. 75, aff'd 108 F. 2d 322) first ruled that the '016 patent was expressly limited to antifriction bearing mills driven with 50% or more of the required power supplied by tension on the strip, holding at page 80:

> "All that Steckel can attain, therefore, over Coryell is what he has claimed in the operation of the mill 'largely' by tension on the delivered material or strip. This teaches that the power or energy applied to the strip must be greater than that occasioned by the power applied to the rolls."

---

[1]The only thing that can be gleaned from the opinion (107 F. 2d 27, 30) as to what United was supposed to have said was that it was not interested in taking over the defense of that action because it was not required to do so under its guarantees with respect to the mills charged to infringe in the *Steel Corporation* litigation.

He also found that the cold mills there accused operated with more energy (i.e. above 50%) supplied by tension than the energy applied to the rolls directly (at page 80, second column, 22 F. Supp.).

These determinations by Judge Fake squarely placed both the '016 patent and the operation of the mills there accused outside United's exclusive field of license.

Thus, as a matter of fact, there was no issue in the *Steel Corporation* litigation concerning any rights or immunities under the 1927 agreement presented for consideration in relation to the '016 patent once the court construed that patent to be limited to tension drives above 50% and found that the accused cold mills were so operated.[1] With the patent so construed and with the 1927 agreement clearly not relating to tensions of over 50% United, under these circumstances, had nothing to complain about the '016 patent at all (cf. Pet. 23).

Cold Metal's assertions of its own self-serving declarations (Pet. 23) in its agreements with third parties are clearly incompetent to support any so-called "practical construction".

There exists no conflict, direct or otherwise, with the decisions of the Third Circuit Court of Appeals in either the *United* litigation or the *Steel Corporation* litigation and Cold Metal's assertions about a so-called "practical construction" are without foundation in fact and were considered and expressly rejected by the tribunals below.

---

[1]Neither in Judge Fake's opinion nor that of the Court of Appeals in the *Steel Corporation* case is there any indication that Cold Metal had been asserting that the '016 patent included mills driven with less than 50% tension.

Reasons Why This Petition Should Not Be Granted As to Questions IIA to IID

1. Viewed in any light, the issues presented relate only to the interpretation and construction of a private contract wherein particular language was employed to resolve a special situation relating to conflicting patent applications and the contracting parties' commercial interests at the time. The issues, resolved against Cold Metal by the Master, District Court and Court of Appeals, are of no public importance. So far as Cold Metal's pending litigation is concerned, the existence of actions in other circuits (Pet. 27-9) makes it a possibility that an actual conflict may later develop which may then be considered by this Court. Also, the issue of indispensable party (Pet. 28), while an issue in other cases, is not an issue in this case.

2. No conflict exists, either in fact or in principle, with the Court of Appeals for the Third Circuit (*supra*, pp. 13-8).

3. On the facts here presented, there is no "unconscionable" or "unwarranted" expansion of the doctrine of implied rights and the decision below is in no way contrary to this Court's decision in *Lawther* v. *Hamilton* (1888), 124 U. S. 1, as a mere glance at page 11 of that opinion will clearly demonstrate. In that case there was no express license grant involved, as there is here, whereby the licensee could not enjoy the full scope of the license grant without infringing another of the licensor's patents (*supra*, pp. 8-10, 12 and reasons 4 and 5, *infra*).

4. The concurrent findings and decisions below do not present the issues posed by the questions. We are not here

concerned with whether the "inventions of the licensed patent can be enjoyed without trespassing upon the other patent" but whether enjoyment of the full scope of an express license grant may be precluded by another patent owned by the licensor (*supra*, pp. 10-12).

5. The concurrent decisions below are clearly correct on the facts presented.

6. The failure of the Statement to set forth accurately the facts upon which the real issues turn, and the inaccuracies in stating the facts concerning alleged conflict of the decisions below with decisions of the Third Circuit, merit denial under Rule 23-4 of this Court.

Statement as to Questions IA to ID

'195 claims 4 and 15 have been considered exemplary. Stated without artifice, the claimed subject matter relates to a backed up mill having (a) working rolls; (b) backing rolls of larger diameter; and (c) "anti-friction bearings" (cl. 4) or "anti-friction mounting" (cl. 15) for the backing rolls.[1]

In so far as the backed up mill and elements (a) and (b) are concerned, the concurrent findings below show that backed up mills employing the specified rolls were old in the art and that the specified sizing thereof was conventional (J. App. I, 76, 180, 317; Pet. App. A, 3a). The prior art mills, however, employed oil or grease lubricated open-type plain bearings (J. App. I, 81, 84-5, 215, 317, 327). Thus, in so far as the claimed subject matter is concerned, the only

[1]It was concurrently found below that the claim verbiage relating to the size and character of the rolls and bearings merely stated known requirements and were within the knowledge of those skilled in the art (J. App. I, 190-1, 320-1; Pet. App. A, 21a-22a).

point of departure over the mills of the art lies in the utilization of "anti-friction bearings" or "anti-friction mounting" in place of the prior art plain bearings thereon. This was recognized as a "vital feature" by the District Court (J. App. I, 318; cf. Pet. App. A, 18a).

Patent '016, as construed below, relates to the mill of patent '195 operated in a particular manner, i.e. with tension on the delivered strip (J. App. I, 177, 240, 246, 313-4, 315, 330, 331, 332; Pet. App. A, 26a). In so far as the mill structure is concerned, the '016 claims employ the terms "anti-friction mounting" (cl. 12) and "anti-friction backing" (cl. 24).

The concurrent findings below show that the terms "anti-friction backing" as employed in '016 and "anti-friction mounting" as employed in both patents had no established meaning in the art and were terms of Steckel's own dewising (J. App. I, 114, 318, 330; cf. Pet. App. A, 26a). These two terms are expressly defined in the '016 specification, in a portion thereof not referred to by petitioners (Pet. App. B, 65a, lines 79-87; cf. Pet. 10-11), as follows:

> "The anti-friction backing of the small rolls[1] may be provided by [1] anti-friction bearings for the backing rolls, or [2] by making the backing rolls of a large diameter compared with their bearing shaft so as to resemble wheels, which construction will permit the use of plain shaft bearings, or [3] *by any other suitable way for reducing the frictional drag on the small rolls.*" (Material in brackets, emphasis and footnote added).

The specification amplified, described and illustrated the first two of the three defined ways. For the first, "anti-

[1]As originally filed in 1923, this opening clause read "The anti-friction backing of the small rolls and the anti-friction mounting of the backing rolls may be provided by * * *" (Ex. D-1, p. 9).

friction bearings" (Pet. App. B, 69a, lines 4-9), and as to the second, by the large wheel-like structure illustrated in Figs. 4 and 5 (Pet. App. B, 68a, lines 112 et seq.). This second embodiment was admitted by Steckel to be of purely academic design and of a type that no one would ever build (J. App. II, 34). There was no amplification, description, or illustration of the third stated way, i. e. "any other suitable way for reducing the frictional drag".

In the '195 divisional patent the above definition is omitted, the term "anti-friction backing" is not used and the large "wheel-like structure" of '016's Figs. 4 and 5 is omitted. The term "anti-friction mounting" appears only once in the '195 specification (Pet. App. B, 81a, lines 29-34), no definition therefor is provided and the only illustrated and described embodiment thereof is an "anti-friction bearing" preferably of the caged roller type.

As mentioned earlier, the conventional prior art roll neck bearing was an open oil or grease lubricated plain bearing of the sliding type in which, as found below (J. App. I, 215)

> "* * * it was difficult or impossible under operating conditions to maintain an oil or grease film between the bearing sleeve and the bushing and to exclude from the bearing surface dirt, water, scale, and other foreign matter which seriously affected the function and efficiency of the bearing."[1]

The Morgoil bearing, as concurrently found below, is nothing but an improved plain bearing whose structural and operating characteristics closely resemble the bearings that were employed on the backed up mills of the prior art. The

[1]The prior art had recognized that these were the causes of poor plain bearing performance as well as the desirability of improving these plain bearings (J. App. VIII, 558-9).

Morgoil bearing is cooled by lubricant, maintains the oil film and is sealed to keep out dirt, water and other foreign matter (J. App. I, 215-6, 219-20, 327; Pet. App. A, 24a-25a).

At trial, Republic urged that the full breadth of express definition in patent '016 for the terms "anti-friction backing" and "mounting" rendered the claims invalid for lack of invention, for indefiniteness and for undue breadth. Republic took the position that the Morgoil bearing, although it was not an "anti-friction bearing" and obviously did not respond to the wheel-like structure, was a "suitable way for reducing the frictional drag" and thereby responded to the third way broadly specified in the express definition.

In resolving the issue of validity, the Master found that the third way incorporated in the express definition was "broadly and indefinitely stated" but *saved the claims from invalidity by expressly limiting the meaning of the terms in question to the first two of three specified ways* i.e. "With those expressions used in the claims so interpreted, the claims are not overly broad as defendant contends, and in so far as the use of the terms 'anti-friction mounting' and 'anti-friction backing' are concerned, the claims in question are sufficiently definite * * *" (J. App. I, 117).

On the issue of infringement the Master found

> "* * * that Morgoil bearings are not 'anti-friction bearings' within the meaning of that term as it was understood in the industry and art prior to Steckel and as such term was understood and used by Steckel in the specification and claims of both patents '195 and '016" (J. App. I, 218).[1]

---

[1] "Anti-friction bearing" meant and still means a bearing in which the load is supported on rolling elements, i.e. balls or rollers (J. App. I, 116, 214, 318).

The Master, contrary to Cold Metal's inference (Pet. 10), found that the Morgoil, due to its different *structural and operating* characteristics, was not an equivalent of the "anti-friction bearing" (J. App. I, 218, 219-20).

Despite the obvious fact that the Morgoil mills also did not respond to the wheel-like structure, the Master apparently overlooked his limited construction of the terms "anti-friction backing" and "mounting" to save the claims from invalidity and held the claims of both patents employing these broad terms to be infringed by the Morgoil bearing mills as well as by the antifriction or roller bearing mills. The Master thus erroneously gave effect to the "broadly and indefinitely stated" third way of "any other suitable way for reducing the frictional drag" on infringement after previously saving the claims from invalidity by a limited construction that expressly excluded that third way.

This conflict was presented to the District Court. It affirmed the Master's fact finding that (1) the Morgoil bearing was not an antifriction bearing or an equivalent thereof (J. App. I, 327) and expressly found that (2) the Morgoil bearing mills did not respond to the second specified way as defined in '010, i.e. the wheel-like structure (J. App. I, 345), and was thereby faced with the same problem of undue breadth versus validity. The District Judge, *as had the Master*, expressly limited the scope of the terms to the first two of the three defined ways to save them from invalidity, i.e. "Thus defined, the claims are not in either of the foregoing or in any other respect overbroad * * *" (J. App. 330; cf. 318). However, he gave effect to the limited construction in resolving the issue of infringement and concluded that since on the facts of record the Morgoil bearing was not an "anti-friction bearing" or its equivalent and did not respond to the wheel-like structure, the accused

Morgoil mills could not come within the limited scope of the terms "anti-friction backing" or "mounting" and therefore did not infringe (J. App. 1, 345, 327).

He succinctly stated that adoption of Cold Metal's asserted breadth of construction would result in a holding of invalidity, as follows (J. App. 327-8):

> "Plaintiffs contend that the Morgoil bearings respond to the disclosures in the apparatus claims calling for anti-friction bearings and anti-friction mounting. To accept plaintiff's argument that these expressions were intended to embrace any bearing, present and future, without being limited and defined by that specific disclosure of roller bearings found in the claims and specifications, would make the apparatus claims so broad and inchoate that they would fall victim to the same defect which invalidated the method claims[1]. Plaintiffs cannot, for the purpose of defending the validity of the apparatus claims, have the benefit of the limited meaning which the inventor intended these expressions to have, and then for the purpose of charging an infringement, assert a broader meaning so as to include within their scope another type of bearing, independently developed after the issuance of the patent through the skill and ingenuity of other people."

The District Court thus determined the Morgoil bearing mills did not infringe because (a) the terms "anti-friction mounting" and "anti-friction backing" had to be limited to the two specifically illustrated and described embodiments,

---

[1]These claims were held invalid below on the ground, *inter alia*, of undue breadth (Pet. App. A, 7a; J. App. 195-6, 321-2) for the finding was that those claims covered "processes practiced in the prior art, employing flood cooling and specialized lubricants and lubricating systems as well as similar processes that might be devised in the future" (Pet. App. A, 7a; J. App. 1, 321, 84, 195).

i.e. (1) antifriction bearings and (2) the wheel-like structure, in order to save the claims from invalidity; (b) the Morgoil bearing in fact was not an "anti-friction bearing" or an equivalent thereof; and (c) the accused Morgoil bearing mills obviously did not respond to the "large wheel-like structure" and was not an equivalent thereof.

As the above quoted portion of the District Court's opinion indicates, its holding of non-infringement was *not predicated* on the ground that the Morgoil bearing was invented after the issuance of the Steckel patents, as erroneously asserted at page 12 of the petition.

The Court of Appeals, while it considered all points urged, did not deem it necessary to restate all of the details shown below and specifically referred the District Court's opinion "for amplification of the discussion" (Pet. App. A. 3a). In holding that the "judgment of the District Court upon this feature of the case was correct" the Court of Appeals implicitly recognized the necessity of the limited construction to save the claims from invalidity and explicitly found that the terms in question could not be construed to cover "such a different type of means" as the Morgoil bearing without doing "violence to the specifications" (Pet. App. A. 26a).

Contrary to Cold Metal's assertions at page 13 (see also page 10 and the concluding clause of Question 1C), the Court went on and expressly affirmed the finding below that the Morgoil bearing was not an equivalent because of the fact it was "so completely different in structure and operation" that it could not "be said to secure the same result as the roller bearing *in substantially the same way*" (Pet. App. A. 26a).

The above discussed ground of the Circuit Court's holding rests on the affirmance of the express limitation of the scope of the terms in question to save them from

invalidity and the concurrent factual findings that the Morgoils do not respond to or are equivalents of the terms in question as so limited. Such holding is the specific and controlling ground of decision.

Although, as indicated above, the District Court did not predicate its holding on the ground that infringement was avoided because the Morgoil bearing was not invented until after the issuance of the Steckel patents, Cold Metal argued strongly to the Circuit Court, as they do here, that this was the basis of the District Court's holding. It was in express reply to this contention that the Court of Appeals made its statement about those "old decisions" being "in effect" overruled by *Halliburton Oil Well Cementing Co. v. Walker*, 329 U. S. 1. However, as already noted, the Court of Appeals accepted the limitation to the terms in question to the two specified embodiments, recognizing, as had the District Court and the Master, that the claims would otherwise be invalid and had expressly affirmed the concurrent findings of the District Court and the Master that the Morgoil bearings neither responded to, nor were the equivalent of, either of those specific embodiments. The statement "overruled in effect," was, as the opinion below clearly shows, only an answer to a specific contention of Cold Metal and was, at best, an alternative and not a controlling ground of decision in view of the other and specific disposition of the issue by affirmance of the findings and ground of decision below.

Cold Metal bases its petition on two general assertions relative to this alternate and, at best, subsidiary ground of decision: First, that the "decision below is in direct conflict with" certain cited decisions of this Court (Pet. 12, 14, 26), and, second, that the *Halliburton* decision is inapplicable and was misapplied (Pet. 13, 14, 26). In the light of the controlling facts upon which the specific and controlling grounds of the decision below were placed neither of these assertions is of any substance.

Taking the second assertion up first, Cold Metal cannot avoid the fact that the only difference between the backed up mills of the prior art and the mill of the '195 patent lies squarely in the character of the bearing. That is, the prior art mills were equipped with plain bearings and the mill of the patents was to be equipped with "anti-friction backing" or "anti-friction mounting" in contradistinction thereto. In the breadth Cold Metal is here asserting for the terms in question, the claims include simply the old prior art mills and any "suitable way for reducing the frictional drag", without limitation as to structure, function or mode of operation.

This Court over the years has dealt with situations similar to that presented here and has clearly recognized the interrelationship between scope of claims, validity and infringement. Depending upon the particular facts of a case, claims have been saved from invalidity by limitation of their scope but found not infringed as so limited. See *Burr* v. *Duryee* (1863), 68 U. S. (1 Wall.) 531, 572-3, 577, 581; *Westinghouse* v. *Boyden* (1897), 170 U. S. 537, 554-8, 568-71; *Mackay Co.* v. *Radio Corp.* (1938), 306 U. S. 86, 94-5, 101-2.

In other instances and in cases where infringement could be found only by giving the claims a scope of undue breadth, this Court has refused to save them from invalidity by limitation of scope. See *Holland Furniture Co.* v. *Perkins Glue Co.* (1928), 277 U. S. 245, 255 et seq.; *General Electric Co.* v. *Wabash Appliance Corp.* (1938), 304 U. S. 364, 373-4; *Halliburton* v. *Walker, supra; Graver Mfg. Co.* v. *Linde Co.* (1949), 336 U. S. 271, 276-7.

Invalidity or non-infringement in such situations depends upon the circumstances in each case. Here, in the case at bar, all tribunals below recognized the invalidity of the claims in their breadth of assertion (the Court of Ap-

peals expressly noting—Pet. App. A. 25a—that this Court in the *Halliburton* case condemned the claims for defining an element in terms of what it would do rather than in terms of its physical structure), but then gave the claims a limited construction in order to save them from certain invalidity, and found non-infringement because of the fact that the Morgoil bearing did not respond to and was not an equivalent of either of the embodiments to which the terms in question were limited.

Cold Metal seems to assume that the mere fact that a combination is made up of old elements precludes the existence of a "point of novelty" over the art. This is not so, as the *Halliburton* decision clearly shows (Pet. 14, 3-4). The Walker claims there in issue related to the combination of an acoustical resonator with a number of other elements which, in their entirety, were definitive of the old Lehr and Wyatt machine (329 U. S. 1, 8, ftn. 6). The existence of a "point of novelty" is dependent upon the claimed subject matter and the state of the art and is determined by the facts of a given situation. Here two of the three claim elements merely state the conventional prior art mill structure and the only difference thereover is in the character of the bearing. In fact, the District Court in distinguishing the invention over a backed up mill of the prior art expressly termed the bearing as the "vital feature" (*supra* p. 20).

The decision in *Faulkner* v. *Gibbs*, 338 U. S. 267, in the last analysis held that on its particular facts the patent was found to be infringed in the scope in which it was held valid and the concurrent findings to that effect would not be disturbed where they were not clearly erroneous. In the case at bar, the concurrent findings of fact preclude any determination that the Morgoil bearing mills infringed in view of the recognized necessity for limiting the claims to avoid invalidity.

Now as to Cold Metal's first assertion, i.e. the asserted conflict of decision (*supra* p. 20) the controlling facts and ground of decision preclude the existence of a direct or other conflict between the decision below and the cases cited by Cold Metal. The cited cases are not applicable to the case at bar since they do not involve the situation where validity is dependent upon limitation of the scope of the claim terminology to specific structures or their equivalents, and wherein the facts show that the accused element does not respond to those specific structures or is an equivalent thereof. The cited cases relate generally to the doctrine of equivalents and resolve the issue of equivalency in each instance on the particular facts presented.

Reverting for a moment to the *Halliburton* decision, it is noted that this Court, though holding the claims invalid, pointed out (329 U. S. 1, 13) that had Walker's claims accurately described the resonator, they could not have been construed to include something else that might bring about the same result if the substituted device (1) functions substantially differently, or (2) was not known at the date of Walker's patent as a proper substitute for the resonator, or (3) had been invented after the date of the patent. As stated, either of the first two grounds is sufficient in and of itself to support a determination of non-infringement.

The first two above stated grounds are present here for it was found as a fact, first, that the Morgoil bearings did not respond to either of the two specific structures and were not equivalents thereof since, in addition to the structural differences, they did not secure the same result in substantially the same way and second, they certainly were not known at the date of the patent as a proper substitute.

Whether or not the *Halliburton* decision overruled or did not overrule the decisions cited by Cold Metal on the point of after invented elements cannot be reached in

the posture of this case, since on the facts here presented, non-infringement was determined quite apart from the fact that the Morgoil bearing was after invented.

The issues Cold Metal seeks to raise are therefore, at best, purely hypothetical in relation to controlling findings and grounds of decision below, and the further fact that, if the terms "anti-friction backing" or "mounting" are construed broadly enough to include the Morgoil bearings, then the claims employing those terms are invalid, as recognized by all tribunals below, for as stated and held in *Burr* v. *Duryee*, 1 Wall. (68 U. S.) 531, 581:

> "It matters little on which horn of this dilemma the case be put, the result must necessarily be the same."

Cold Metal, in reality, is seeking to overturn concurrent findings and have this Court search the record in order to make new and different findings of fact. There is no conflict of decision with respect to any principle or rule of law applicable to the controlling facts and issues in this case.

Reasons Why This Petition Should Not Be Granted As to Questions IA to ID

1. In view of Cold Metal's admission that Republic is licensed under patent '195, all of the questions are and will remain moot in so far as they relate to that patent.

2. The dismissal of the complaint below on the ground of license renders all the questions moot in so far as patent '016 is concerned and they will remain moot unless and until Questions IIA and IID are considered appropriate questions for review and are resolved in Cold Metal's favor.

3. The inextricable intermingling of the two patents in suit (Pet. 4, cf. *supra* pp. 19-21) in disregard of the fact that all issues as to '195 are and will remain moot in any event renders the questions improper and inappropriate for consideration.

4. None of the questions meets or even relates to the controlling grounds of the concurrent determinations below, i.e. the express limitation of the scope of the terms "anti-friction mounting" and "anti-friction backing" to save the claims from invalidity and the concurrent factual findings that the accused Morgoil mills do not respond to the claims as so limited and are not equivalents thereof. As such, they do not pose issues that are properly presentable in the posture of this case and at best present only hypothetical issues for consideration. There is no conflict on any controlling ground of decision between the decision below and any decision of this Court or any other court. Cold Metal's reasons 1 through 3 (Pet. 26) are devoid of any substance.

5. The questions presented at best relate to a narrow issue of infringement of particular claims of two long expired patents and are of no public importance and present no important question of law. No conflict of decision in fact exists since this is the first case in which Morgoil bearing mills have been in issue. If, as the petition indicates (Pet. 27-8), litigation exists in other circuits which may give rise to an actual conflict, a proper time to consider the matter may come if and when an actual conflict in fact arises. Questions IB (1) and IC rise and will be considered in a different factual context at least in the litigation that has been tried and is awaiting decision (Pet. 28; Res. App. A, 50a).

6. The inference in the petition (Pet. 18, 27) that a conflict exists with the Third Circuit is entirely unfounded. Reference to the cited opinion in the *United* litigation shows that the issue of infringement by the Morgoil bearings was not even litigated in that action.

CONCLUSION

The petition for writ of certiorari fails to show any reason which should move this Court to review the carefully considered concurrent decisions of the tribunals below on the matters here sought to be reviewed.

The petition is without merit and should be denied.

Respectfully submitted,

DRURY W. COOPER
Counsel for Respondent

JOHN N. COOPER
ROBERT E. ISNER
Of Counsel

APPENDIX A

PORTIONS OF MASTER'S REPORT AND OPINION OF DISTRICT COURT

Portions of Master's Report, Dated September 18, 1952, Relating to the License Defense

(Joint Appendix I, 226-258, 263-265)

THE LICENSE DEFENSE

The issues hereinbefore considered have been concerned only with the validity or invalidity and infringement of the claims in suit of patents '016 and '195 without regard to the effect of a certain agreement dated June 20, 1927 between Cold Metal and United Engineering & Foundry Company. We come now to the consideration of that agreement and its effect on the ultimate question of the plaintiffs' right of recovery in the present action. For this purpose it will be assumed that both patents in suit are valid and that each of the accused mills is within the scope of one or more of the claims in suit of either or both patents.

With these assumed premises, defendant asserts that plaintiffs are foreclosed from any recovery for infringement because defendant purchased the accused mills from United Engineering & Foundry Company which, from the beginning, had a license to make, use, and sell such mills under the June 20, 1927 agreement between Cold Metal and United (Ex. D-31).

On the other hand, Cold Metal, although not denying that United was granted some rights by virtue of the 1927 agreement, contends that United's rights are limited by the agreement to the "common subject-matter" claims; that all "claims to common subject-matter" are found in

patent '195 and none in patent '016; and hence that United's rights under the 1927 agreement and license, do not include mills embodying the tension subject-matter of the claims in suit of patent '016. Consequently, Cold Metal argues that United, and therefore United's customers, obtained no immunity by such license from suits by Cold Metal for infringement of the claims of patent '016. In addition, Cold Metal contends that even if the 1927 agreement includes mills of the type here involved, the accused mills gain no protection by such agreement from the charges of infringement, because the defendant did not purchase the complete mills from United.

On June 20, 1927 Cold Metal and United entered into an agreement (Ex. D-31) which provides in part as follows:

> "Whereas, both parties own certain applications pending in the United States Patent Office relating to 4-high rolling mills and the rolling of thin material; and
>
> Whereas, it has been suggested to the parties by their attorneys that it may be possible to secure claims to a certain subject-matter common to both parties' applications;
>
> Now, Therefore, in consideration of the sum of one dollar ($1.00) and other good and valuable consideration paid by each party to the other party, the receipt of which is hereby acknowledged, and in further consideration of the mutual covenants hereinafter contained, the parties hereto agree for themselves, their successors and assigns as follows:
>
> 1. The parties will, through their appropriate officers, immediately hold a conference at which their patent attorneys, Byrnes, Stebbins & Parmelee, shall be authorized by both parties to suggest claims covering certain subject-matter common to both

parties' applications, and which it is understood are not at the present time being presented in Cold Metal's applications; together with a plan for securing the allowance of such claims;

2. Cold Metal shall not, after such conference, present in its application claims of the scope suggested at the conference, or directed to the subject-matter common to both parties' applications, if such claims are broader or of different scope than the claims now presented in Cold Metal's application, except with the agreement and cooperation of United.

3. When and if such claim or claims to common subject-matter are granted in any patent issued on Cold Metal's applications, Cold Metal shall grant to United a license to make, use and sell rolling mills under such claim or claims, which license shall be exclusive to United for 4-high hot mills and for 4-high cold mills, in which the major portion of the power required by a roll stand is supplied to the rolls directly and not through tension exerted on the material for pulling it through the rolls; Cold Metal, however, reserving the right to make or have made for its own use and to use in its own plant or plants such hot and cold mills * * *."

At the time the foregoing agreement was entered into both Cold Metal and United had applications pending in the Patent Office relating to 4-high rolling mills and the rolling of thin material. The Cold Metal application was Steckel's '016 application filed June 30, 1923 (Ex. D-1, p. 1 et seq.). The United application was the Biggert & Johnson application filed April 20, 1926 (Ex. D-2, p. 425, et seq.). Both applications had been filed and were being handled by the same firm of patent attorneys (hereinafter called the "Byrnes firm").

Steckel's '016 application as filed contained, among others, three claims directed to a cold mill comprising relatively small reducing rolls and backing rolls therefor, having anti-friction mounting (application claims 1, 2 and 3; Ex. D-1, p. 22). However, on April 6, 1926, prior to the agreement with United, those claims were cancelled from Steckel's application after rejection by the Patent Office for lack of invention in putting anti-friction bearings on the backing rolls (Ex. D-1, pp. 22, 34, 36-37). The Biggert & Johnson application was based on the prior installation and use at Rome, New York in December, 1925 and January, 1926 of a 4-high single-stand cold rolling mill having working rolls, larger diameter backing rolls, and anti-friction or roller bearings on the necks of the backing rolls.

After the Biggert & Johnson application was filed the Byrnes firm soon became aware that it was prosecuting two applications for different clients disclosing common subject-matter. Members of that firm thereupon conferred, separately, with representatives of the parties, and, without disclosing to either Cold Metal or United the application of the other, advised each that both applications involved the common subject-matter of 4-high mills. At a meeting arranged at the request of both parties, the June 20, 1927 agreement drawn by the Byrnes firm was executed by Cold Metal and United in an attempt to settle the conflict resulting from the two pending applications.

At the time the agreement was entered into no so-called common subject-matter claims were being presented in Cold Metal's application. However, as recited in the agreement, the Byrnes firm was authorized to suggest claims "covering certain subject-matter common to both parties' applications * * * together with a plan for securing the allowance of such claims." (Ex. D-31, Par. 1). The agreement also provided

that Cold Metal should not present in its application claims of the scope to be suggested, or directed to the subject-matter common to both parties' applications, if such claims should be broader or of different scope than the claims then pending in Cold Metal's application "except with the agreement and cooperation of United." (Ex. D-31, Par. 2). The agreement further stipulated that when and if such claim or claims to common subject-matter were granted in any patent issued on Cold Metal's application, Cold Metal would grant to United "a license to make, use and sell rolling mills under such claim or claims, which license shall be exclusive to United for 4-high hot mills and for 4-high cold mills, in which the major portion of the power required by a roll stand is supplied to the rolls directly and not through tension exerted on the material for pulling it through the rolls." (Ex. D-31, Par. 3).

Following the execution of the June 20, 1927 agreement and in pursuance of "a plan for securing the allowance" of "claims covering certain subject-matter common to both parties' applications," United's Biggert & Johnson application, including a continuation-in-part application filed on October 24, 1927, describing and claiming both single-stand and tandem mills, was prosecuted in the Patent Office. The continuation-in-part application eventuated in Biggert & Johnson patent 1,654,325, which issued on December 27, 1927, and covered 4-high single-stand and tandem hot or cold mills having working rolls, larger diameter backing rolls, and anti-friction or roller bearings on the backing roll necks (Ex. D-2, pp. 49 et seq., 542).

In May, 1928 all but one of the claims of the Biggert & Johnson patent were copied into Steckel's pending '016 application with a request for interference. By reason of United's default in contesting the interference, the same terminated in favor of Cold Metal's '016 application because

of Steckel's earlier filing date (Ex. D-1, pp. 52-60, 63-70; Ex. D-2, p. 568). Following the termination of the interference the Biggert & Johnson claims were cancelled from Steckel's '016 application without prejudice and, pursuant to a requirement for division, those claims were re-asserted in Steckel's divisional application filed December 9, 1929, which eventuated in patent '195, issued on October 21, 1930 (Ex. D-1, pp. 71, 72, 151 et seq.). Thus the provisions of paragraphs 1 and 2 of the June 20, 1927 agreement were carried out in that "claims of the scope suggested at the conference, or directed to the subject-matter common to both parties' applications" ultimately came into Steckel's '016 application "with the agreement and cooperation of United", i.e., by United's forbearance to contest the interference proceeding. See *Cold Metal Process Co. v. United Engineering & Foundry Co.*, (3rd Cir.) 107 F. 2d 27, 32. As a result of the granting to Cold Metal of a patent containing "claims to common subject-matter" (patent '195), there came into being United's license as set forth in paragraph 3 of the 1927 agreement.

Defendant maintains that under the terms of the 1927 agreement United obtained two licenses—a non-exclusive license as well as an exclusive one. According to defendant, United was granted a non-exclusive license to make, use and sell rolling mills under the common subject-matter claims and a further grant of an exclusive license to make, use and sell rolling mills of a certain defined character, viz., 4-high hot mills and 4-high cold mills in which the major portion of the power is supplied directly to the rolls and not through tension.

I find nothing in the agreement which provides or even contemplates two separate and distinct licenses to United. On the contrary, it is apparent from the plain language of

paragraph 3 that upon the issuance to Cold Metal of a patent containing claims "directed to the subject-matter common to both parties' applications," United was granted but one license, that being an exclusive license under the common subject-matter claims to make, use and sell 4-high hot mills and 4-high cold mills "in which the major portion of the power required by a roll stand is supplied to the rolls directly and not through tension exerted on the material for pulling it through the rolls." (Ex. D-31). Accordingly, I do not accept defendant's interpretation that two separate and distinct licenses were granted to United by the agreement.

The 1927 agreement between Cold Metal and United has been the subject of considerable litigation between those parties, the effect of which has been to establish beyond any question that United not only has a license, but has an exclusive license from Cold Metal under such agreement. *Cold Metal Process Co. v. United Engineering & Foundry Co.*, 3 F. Supp. 120, 131, aff'd. 3rd Cir., 68 F. 2d 564; cert. den. 291 U. S. 675; *Cold Metal Process Co. v. United Engineering & Foundry Co.*, 83 F. Supp. 914, 917; modified and aff'd. 3rd Cir., 107 F. 2d 27.

In Cold Metal's infringement suit against United (3 F. Supp. 120), which involved only patent '195, Judge McVicar, as previously pointed out, held the patent valid but ruled that United had not infringed the claims thereof by reason of the 1927 agreement. Cold Metal filed a petition for re-argument in that case, contending that the license agreement did not extend to and include the tandem mill claims of patent '195 (claims 8, 9, 10, 12 and 16); that the tandem mills made and sold by United were not within the terms of United's license and that therefore United had infringed those claims. The District Court rejected Cold

Metal's contention and dismissed such petition. In refusing to modify its original decree in the infringement suit as requested by Cold Metal, the court, in effect, re-affirmed its original ruling that United's license under the 1927 agreement extended to and covered all the claims of patent '195 and that mills, both single-stand and tandem, made and sold by United and coming within the scope of one or more of those claims, were included within the protection of the 1927 license agreement. Subsequently, in an accounting action brought by Cold Metal against United (83 F. Supp. 914, 918) Judge McVicar again passed on the same issue and again reaffirmed his prior ruling as to the scope of the license agreement insofar as all the claims of patent '195 were concerned.

With the 1927 agreement established as a license covering both single-stand and tandem mills coming within one or more of the claims of patent '195, Cold Metal, in November 1934, brought suit against United in the Western District of Pennsylvania (Equity No. 2991) for an accounting, seeking, among other things, to fix the royalty rate and the amount due from United under the June 20, 1927 license. After a hearing on Cold Metal's application for a preliminary injunction, Cold Metal filed a Supplemental Bill seeking rescission of the 1927 agreement or, in the alternative, for the determination of the amount due Cold Metal under that contract. On final hearing, the District Judge (McVicar) held that Cold Metal had elected to affirm the June 20, 1927 contract and that it would be inequitable to decree a rescission thereof. Accordingly the court held that Cold Metal was entitled to a decree "providing for the determination of the amount due to date from defendant (United) under said contract and the basis of payment to be made thereafter." *Cold Metal Process Co. v. United Engineering &*

Foundry Co., 83 F. Supp. 914, 917. On appeal by Cold Metal from the interlocutory decree in the foregoing action, the Circuit Court sustained United's license and held with respect to the 1927 agreement as follows:

> "Cold Metal says that the license is invalid because the agreement of 1927 does not prescribe temporal or territorial limits for it. We do not think that this objection invalidates the license. It is to be a license under the patent and in the absence of anything to the contrary, the license is implicitly coextensive in time and territory with the patent.
>
> "It is now impossible to restore Cold Metal and United to their status quo at the time they entered into the agreement on June 20, 1927, when each had an application in the Patent Office for 4-high roller bearing mills, and neither knew which record date was earlier or what claims were included or disclosed in the application of the other. Application for the Steckel patent had been assigned to Cold Metal and the Biggert and Johnson application had been assigned to United. As a result of the agreement of 1927 United was deprived of the right to contest the granting of the claims which were copied from its own (Biggert & Johnson) application into the Steckel patent. Under such circumstances, even though a party has not fully performed his contract according to its legal effect, the contract will not be rescinded if it has been partly performed and the parties would be embarrassed and the status quo cannot be restored. * * * The only benefit which United received for its forbearance to contest the interference proceeding was the exclusive license which it secured by the agreement of June 20, 1927. This United is seeking to retain and Cold Metal is seeking to take away. Each party in signing the agreement doubtless thought it was getting something from, and was giving something to, the other. The one was getting a patent; the other an exclusive

> license under it. Cold Metal is unwilling to surrender the Steckel patent and United cannot be asked to give up its exclusive license. Cold Metal with a patent and United with an agreement giving it an exclusive license are in the position in which they placed themselves and we should leave them there. The agreement of 1927 is, as Judge McVicar found, 'a valid and subsisting contract' for a license. This 'contract' has been partly performed and equity requires that it be completed by supplying the amount which United must pay for the license in accordance with the intention of the parties. * * * The evidence shows what that intention was, for the parties had an 'understanding' as to what the royalties would be and what that understanding was can readily be ascertained from the evidence by the master appointed or to be appointed by the District Court." *Cold Metal Process Co. v. United Engineering and Foundry Co.*, 3rd Cir., 107 F. 2d 27, 31-33.

Following the above-mentioned decision by the Circuit Court the case was returned to the District Court for an accounting, as requested by Cold Metal, and a Master was appointed to ascertain the amount of damages due Cold Metal from United under the 1927 license (Ex. D-40). The proceeding for an accounting is still in progress before the Master and involves all of Republic's accused mills before the court in the present action, with the exception of the No. 1 or "broadside" stand of Republic's 98" Hot Mill (Ex. D-34, Ex. D-41, tabulation; Ex. D-44; R. 5088-5096, 7996-97).

Subsequent to the decision in the United case, reported in 107 F. 2d 27, Cold Metal, in briefs filed in the Supreme Court of the United States in its action for infringement against Carnegie-Illinois Steel Corporation (American Sheet & Tin Plate Company) conceded that United had a

license under the 1927 agreement and that the effect of the decisions in the United litigation was to free from infringement all the mills purchased by steel manufacturers from United coming within the scope of the 1927 agreement (Ex. D-43, p. 20; Ex. D-117, p. 17).

As a result of the prior adjudications in this series of litigations between Cold Metal and United, it appears to be established beyond all doubt that United was granted an exclusive license by Cold Metal and that such license included hot and cold mills, single-stand and tandem, made and sold by United and embodying one or more of the "claims to common subject-matter", i.e., the claims of patent '195. In the cases referred to there was no occasion for the courts to consider and determine whether United's license also included mills coming within the claims of patent '016 and embodying the tension subject-matter of that patent.

At the moment, the latest decision in this series of litigations between Cold Metal and United is found in the case of *Cold Metal Process Co.* v. *United Engineering & Foundry Co.*, 3rd Cir., 190 F. 2d 217, decided June 8, 1951, amended by an unreported order dated August 6, 1951. In that matter it appears that on March 28, 1949, United had filed what it termed a "Cross-Complaint" and "Ancillary" in the pending accounting proceeding, Equity No. 2991. By its pleading, United sought injunctive relief against Cold Metal to prevent the latter from bringing or threatening to bring any further suits for infringement of patents '195 and '016 against any user of 4-high roller bearing mills purchased from United, the use of which would fall within the scope of the license which United held from Cold Metal by virtue of the 1927 license contract. United also sought by that pleading to have Cold Metal account for moneys collected by it from users of mills purchased from United

within the scope of United's license. Apparently, by its pleading filed on March 28, 1949 in the aforementioned accounting proceeding, United asserted rights as a licensee under the 1927 agreement with respect to mills embodying the tension subject-matter of patent '016 in addition to its then established rights under the agreement with respect to mills coming within the claims of patent '195. All the other adjudicated cases between Cold Metal and United had involved only patent '195 and the question as to whether the mills made and sold by United came within the claims of that patent, without regard to the tension subject-matter of patent '016. In any event, the District Court (Judge Follmer) dismissed United's pleading on the ground that it was not ancillary to the accounting proceeding and denied the motion for preliminary injunction. 92 F. Supp. 596. On appeal, the Court of Appeals for the Third Circuit reversed the dismissal and remanded the case for trial of the issues involved. In the opinion Chief Judge Biggs reviewed the history of the litigation between the parties and said (190 F. 2d, 217, 219, 220):

> "In substance it had been determined that United had an exclusive license from Cold Metal to make, use, and sell the four-high mills covered by the 1927 agreement and that United should pay royalties to Cold Metal in an amount to be determined by the Court below * * *.
>
> "The issue of validity is not open to United for since United is licensed under the 1927 agreement, it cannot attack the validity of a patent under which it is licensed. Cf. Scott Paper Co. v. Marcalus Mfg. Co., 326 U. S. 249. On the other hand, Cold Metal may not deny that United has an exclusive license under the 1927 agreement. These questions are closed insofar as Cold Metal and United and those in privity with them are concerned."

As I see it, the underlying issue here is whether defendant's accused mills or any of them come within the scope and protection of United's exclusive license as granted by the 1927 agreement. If so, such mills necessarily are freed by the license from Cold Metal's charges of infringement, as Cold Metal itself concedes (Ex. D-43, p. 20, D-117, p. 17). Accordingly, the questions for determination are, first whether the operations of the accused mills come within the terms of United's exclusive license, and, second, whether those mills were purchased by defendant from United so as to be within the protection of United's license.

It seems to me that the terms of the 1927 license agreement are clear, unambiguous and plainly define the scope of United's license and the particular character or type of mills included thereunder. The agreement plainly stipulates that upon issuance to Cold Metal of a patent containing claims of the scope suggested at the conference held between Cold Metal and United or "directed to the subject-matter common to both parties' applications," Cold Metal shall grant to United an exclusive license "under such claim or claims" to make, use and sell rolling mills of a particular and well defined character, viz., 4-high hot and cold mills "in which the major portion of the power required by a roll stand is supplied to the rolls directly and not through tension exerted on the material for pulling it through the rolls," (Ex. D-31). Thus, by the express terms of the grant, the boundaries and scope of United's exclusive field of license include all mills of the character expressly defined, namely, 4-high hot mills and 4-high cold mills embodying one or more of the "claims to common subject-matter," in which up to 50% of the power is supplied by tension on the strip. Clearly, United's license does not include within its scope and protection mills in which the major portion of the

power—more than 50%—is supplied through tension. As to such mills, Cold Metal clearly retained all rights, even though they embody the "common subject-matter" claims.

In order then to come within United's exclusive field of license and therefore within the protection of the 1927 agreement, the accused mills must (a) embody "common subject-matter" claims, and (b) also be of the character defined in the agreement, namely, 4-high hot mills or 4-high cold mills in which the major portion of the power required by a roll stand is supplied to the rolls directly and "not through tension" by pulling on the strip. In other words, by the express language of the agreement United's exclusive license is limited, even under the common subject-matter claims, to mills in which the major portion of the power is supplied directly to the rolls and not through tension (Cold Metal Main Brief, p. 192).

Each of defendant's accused mills admittedly embodies one or more of the "common subject-matter" claims, i.e., the claims of patent '195. In addition, with the exception of the 98" hot mill, each embodies the tension subject-matter of certain of the claims in suit of patent '016. The claims of patent '195, viz., the "common subject-matter" claims, relate solely to the described mill structure *per se* and are not concerned with the method of drive or whether the mill is driven entirely or in part by tension or otherwise. (See Cold Metal Reply Brief, pp. 28 and 175). Those claims, therefore, may be infringed regardless of the method of drive utilized. The claims in suit of patent '016, it will be recalled, cover the same basic elements of the mill *per se* as claimed in patent '195, but specify the added element or feature of driving the mill entirely or at least to a "substantial" extent through tension by pulling on the strip.

From the evidence presented and the findings hereinbefore made, it appears that in regular commercial rolling

operations defendant's accused cold mills generally are driven "largely" or to a "substantial" extent by power supplied through tension on the strip, as specified in claims 11, 12 and 24 through 26 of patent '016, but are not driven or operated "principally" or "entirely" by such tension. It is not disputed that in respect of defendant's 98" Hot Mill, tension on the strip is not utilized as a means of driving power. Accordingly, it appears that in the operations of the accused mills, both hot and cold, the power supplied through tension by pulling on the strip is less than 50% of the total power required by the several roll stands. It follows, therefore, that the operation of each of the accused mills responds fully to the express terms of United's exclusive license, in that each embodies the subject-matter of one or more of the "'common subject-matter" claims, i.e., the mill *per se* described in the claims of patent '195, and also is a mill in which the major portion of the power is supplied to the rolls directly and not through tension. Consequently, it is my conclusion that under the plain and unambiguous terms of the grant, the accused mills, both hot and cold, come squarely within United's exclusive field of license and, if purchased from United, are freed by the license from plaintiffs' charges of infringement: not only from the charges of infringing the "common subject-matter" claims appearing in patent '195, but also from the charges of infringing upon the claims in suit of patent '016, namely, claims 11, 12 and 24 through 26, which otherwise would be infringed by the operations of the accused cold mills.

Cold Metal contends, however, that United's rights under the 1927 agreement and license are limited to mills embodying the "common subject-matter" claims of patent '195 and do not include the operations of mills embodying

the tension subject-matter of patent '016 because the latter patent contains no "claims to common subject-matter". In other words, it is Cold Metal's position that the accused cold mills, even though protected by the license from infringement of the claims of patent '195, gain no protection by that license from the charges of infringing upon the claims in suit of patent '016. Consequently, Cold Metal maintains that United, and therefore United's customers, acquired no immunity by the license from suit by Cold Metal for infringement, in so far as the claims of patent '016 are concerned. I do not agree with such reasoning. Conceding the absence from the '016 application and patent of any "claims to common subject-matter," both at the time the 1927 agreement was entered into and when such patent issued, that fact seems to me to be wholly immaterial to the relevant issue of whether the operations of the accused mills are within the scope and protection of United's exclusive license as expressly defined in the agreement.

The license agreement, it will be recalled, was entered into long before the issuance of either patent '016 or patent '195, as well as prior to the issuance of United's Biggert & Johnson patent. Moreover, at the time the agreement was executed neither party knew the contents of the other's application, having been advised only that the two applications related to 4-high rolling mills and the rolling of thin material. Obviously the agreement does not refer to any particular patent, but it does expressly define and fix the boundaries as agreed to between the parties for determining whether a particular mill is within or without the proposed license. As a matter of fact, when agreement for a license was entered into neither party then knew what claims to 4-high mills the Byrnes firm would suggest at the proposed conference to be held immediately following

the execution of the agreement; nor could it have been known which claims so suggested would be granted by the Patent Office or whether the claims would be granted on Cold Metal's original application or, as it later turned out, upon a divisional application. In any event, the parties expressly stipulated for an exclusive license to United under such "common subject-matter" claims as might be suggested by the Byrnes firm and might eventually be granted in a patent issued to Cold Metal, with the further stipulation that United's license, under the common subject-matter claims, would include mills of the character expressly defined in the agreement, viz., 4-high hot mills and 4-high cold mills in which the major portion of the power is supplied directly to the rolls and not through tension.

The plan as contemplated and so carefully spelled out in the agreement was carried out as hereinbefore related. The claims to certain "subject-matter common to both parties' applications" eventually were granted to Cold Metal "with the agreement and cooperation of United" by reason of United's forebearance to contest the interference proceeding. The result was that United's exclusive license under such claims, to make, use, and sell mills of a certain described character in a clearly defined field came into being.

Cold Metal agrees that United's rights, even under the common subject-matter claims, do not extend to 4-high cold mills in which the major portion of the power is supplied through tension for pulling the material through the rolls (Cold Metal Main Brief, pp. 192, 214), but it argues that it was the intention to grant United a license with respect to 4-high hot and cold mills in which the major portion of the power is supplied directly to the rolls and not through tension, only in the event there was tension included in the claims to common subject-matter (Cold

Metal Reply Brief, pp. 66-67). The agreement itself mea
ures the grant and, of course, is controlling in determini
the scope of United's license and the mills included ther
under. If such was the intention, it was not so expresse
in the plain language of the agreement and is refuted
the circumstances in which the parties found themselves
the time the June 20, 1927 agreement was entered into.
that time, Steckel, in his then pending '016 application, w
emphasizing before the Patent Office the concept of drivi
the described mill "principally" through tension by pulli
on the strip (Ex. D-1, pp. 1-50). Although his applic
tion then and later contained broad claims to a lesser amou
of tension, it appears beyond question from the file wrapp
history that up to the time of the filing of the October 192
amendments which broadened the '016 application and th
'018 application to include mills driven "largely" or to
"substantial" extent by tension, Steckel continued to pla
emphasis on the concept of driving the described mill pri
cipally or entirely through tension by pulling on the stri
and distinguished his invention from cited references o
that ground (Ex. D-1, pp. 1-97; Ex. D-1, pp. 341-386)
The October, 1929 amendments were filed subsequent to th
May, 1928 amendments which copied into Steckel's '01
application the claims from United's Biggert & Johnso
patent.

It would only be logical therefore, since Cold Meta
was agreeing in June, 1927 to grant United an exclusiv
license under claims to certain subject-matter common t
both parties' application, that Cold Metal should wish t
reserve and retain for itself the subject-matter whic
Steckel was then so strongly urging in the prosecution o
his application, namely, the concept of driving the describe
mill "principally" by tension. As a consequence, the 192

agreement by its express terms limited United's exclusive license under the common subject-matter claims to a clearly defined field covering mills in which the major portion of the power is supplied to the rolls directly and not through tension. Thus Cold Metal retained for itself, even under the common subject-matter claims, all rights with respect to mills in which the major portion of the power is supplied through tension. In addition, by the terms of said agreement, Cold Metal also reserved the right to make or have made for its own use and to use (but not sell) those mills which were within United's exclusive field of license as expressly defined in the agreement (Ex. D-31, Par. 3).

Under the circumstances and in view of the express language of the agreement defining and fixing the boundaries of United's exclusive field of license it is immaterial whether the claims to common subject-matter appear only in patent '195, or whether such claims were granted in a patent issuing upon Steckel's original '010 application, into which such claims were copied in May, 1928, or whether, as it later turned out, those common subject-matter claims were granted in a patent which issued on a divisional application of Steckel's '010 application. The result would be the same in any event in so far as mills coming within the express terms of the license are concerned. If, as Cold Metal now contends, it was the intention to grant United a license with respect to 4-high mills in which the major portion of the power is supplied directly to the rolls and not through tension, only in the event there was tension included in the common subject-matter claims, the agreement could readily have so provided. But the plain language of the license as well as the surrounding circumstances clearly refute any such intention. The fact is, that at the time the June 20, 1927 agreement was entered into no claims

covering "subject-matter common to both parties' applications" were being presented in Cold Metal's pending application, and the agreement expressly so states (Ex. D-31, Par. 1). However, in its pending '016 application Cold Metal was then prosecuting claims for the tension feature, having previously cancelled from such application, after rejection by the Patent Office, certain claims directed to the mill *per se* without the tension feature (Application claims 1, 2 and 3; Ex. D-1, pp. 22, 34, 36-37). Hence Cold Metal, at the time it made the agreement with United, must certainly have realized that the "claims to subject-matter common to both parties' applications", as referred to in the agreement, did not include tension.

As previously pointed out, the claims of patents '195 and '016, as eventually allowed by the Patent Office long after the execution of the 1927 agreement for a license, cover the same basic elements of mill structure, with the '016 claims, however, containing the added feature of driving the described mills entirely or in part through tension by pulling on the strip. It is apparent, therefore, as Cold Metal concedes (Ex. P-264, p. 2), that the subject-matter of the claims of patent '195, directed to the described mill *per se*, is necessarily embodied in mills which also embody the subject-matter of the apparatus claims in suit of patent '016. Thus, the mills *per se* of patent '195 are the same mills disclosed in apparatus claims 11, 12 and 24 through 26 of patent '016, with only the described feature of driving such mills "largely" or to a "substantial" extent through tension by pulling on the strip added in the latter claims. As a result, it is apparent that United cannot possibly obtain the full use and enjoyment of the exclusive license granted to it by Cold Metal, and to which it is entitled by the express terms of the grant, namely, the right to make, use, and sell

mills embodying the common subject-matter claims of patent '195, in which the major portion of the power is supplied to the rolls directly and not through tension, without trespassing upon one or more of the claims of patent '016, notably claims 11, 12 and 24 through 26, which, as previously mentioned, cover the operations of cold mills that respond fully to the express terms of the grant.

It is the rule that where the owner of a patent grants to a licensee the right to make, use and sell a patented device, the grant carries with it by necessary implication "a license under any other patent of the licensor which would be infringed by operation under the grant." *Frederick B. Stevens, Inc. v. Steel & Tubes, Inc.*, 6th Cir., 114 F. 2d 815, 819; *National Rubber Machinery Co. v. McNeil Co.*, 6th Cir., 132 F. 2d 436, 438.

Thus, as the license agreement expressly defines and includes the operation of mills embodying the subject-matter of certain of the claims of patent '016, as well as mills embodying the subject-matter of the claims of patent '195, and as the licensee cannot fully enjoy and use such license without infringing upon claims of the '016 patent, it would appear, under the rule stated by Judge Simons in the *Stevens* case and by Judge Hicks in the *McNeil* case, *supra*, that Cold Metal's grant of an exclusive license to United under the common subject-matter claims of patent '195 to make, use, and sell, 4-high hot and cold rolling mills in which the major portion of the power is supplied to the rolls directly and not through tension, carried with it, by necessary implication and to the extent necessary to permit the licensee, or its customers, the full use and enjoyment of Cold Metal's specific grant, "a license under any other patent of the licensor (here the '016 patent) which would be infringed by operation under the grant."

Although conceding that the principal of the rule stated in the *Stevens* case is well founded in law, Cold Metal argues that such rule is not applicable here because the inventions of the two patents in suit are independent of each other; that no license was granted to United in respect of a particular mill; and also, because the mills *per se* described in the claims of patent '195 can be used and are used without infringing upon any of the claims of patent '016.

I see no particular significance in those arguments, in so far as the present issue is concerned. Here, as in the *Stevens* and *McNeil* cases, the license grant expressly defines and encompasses mills embodying the subject-matter covered by certain claims of both patents owned by the licensor. Besides, as Cold Metal admits (Reply Brief, p. 170), except for the requirement of the Patent Office for division, the claims of patent '195 would have issued directly on Steckel's original '016 application. Cold Metal concedes also that it makes no difference whether we are dealing with two patents, or whether all of the claims are in one patent (R. 9462, 9467).

Hence, in view of the express terms of the 1927 agreement and license, it is immaterial that the inventions of the two patents are independent of each other. Not only each patent, but each claim in each patent must, in any event, be treated as a separate and distinct invention. It is also immaterial whether the license was granted in respect of only one particular machine, as in the *Stevens* case, or whether, as in the present case, the grant was of a license to make, use and sell, all mills of a certain described character in a clearly defined field. *National Rubber Machinery Co. v. McNeil, etc., supra.* Moreover, while it is true, as Cold Metal points out, as, for example, in the case of the hot mills, that by operating the described mills without a winding reel and without utilizing even so much as a "substantial" driving

tension, the mills *per se* of patent '195 can be used and are used without trespassing upon any of the claims of patent '016, nevertheless, the fact remains that United was expressly granted an exclusive license under the common subject-matter claims which later eventuated in patent '195, to make, use and sell the described mills in which the major portion of the power is supplied directly to the rolls and not through tension. The significant fact is that the licensee, and purchasers from the licensee of mills which respond fully to the express terms of the grant, cannot enjoy the fruits of the specific grant without infringing upon certain of the claims of patent '016, namely, claims 11, 12 and 24 through 26. Cold Metal recognizes the rule that the grant necessarily carries with it that without which the thing granted cannot be enjoyed (R. 9574). Consequently, having expressly granted United an exclusive license, under the common subject-matter claims appearing in patent '195, covering mills of a certain described character in a clearly defined field, Cold Metal may not abridge or nullify such grant by charging United's customers with infringement for the use of mills, such as those here involved, which plainly come within that very field, by claiming it has another patent which is infringed by the licensed mills, and further claiming that such other patent is not included in the grant, and thus deprive those customers of United of the rights, privileges and immunities to which they are entitled, under the express terms of the grant, by reason of having purchased licensed mills from the licensee. *Frederick B. Stevens, Inc. v. Steel & Tubes, Inc., supra.*

In contending that United's rights under the 1927 agreement and license are limited to patent '195, Cold Metal argues that until only recently (March 28, 1949) (see 190 F. 2d 217), United itself never asserted any rights under

that agreement with respect to mills embodying the subject-matter of patent '016, but considered that its rights under the license were limited to the claims of patent '195. Apart from the fact, previously pointed out, that Cold Metal's infringement suit against United (3 F. Supp. 120) only involved patent '195, I fail to see how the fact that United may not have asserted any rights under patent '016 can have any bearing on the issues between the parties in the present case. (See 190 F. 2d 217, 219, 220). This defendant, if it purchased licensed mills from United, can not be deprived of its right to immunity from suit for infringement by the licensor simply because the issue here involved, as to the scope of United's license under both the patents in suit, was not raised by United or by some other party in other litigation. In all the prior litigation between Cold Metal and United involving the 1927 agreement, I fail to find any adjudication determinative of the issue here presented as to whether or not United's license encompasses mills embodying the tension subject-matter of certain claims of patent '016, as well as mills embodying only the claims of patent '195. That issue apparently was raised by the pleading filed by United on March 28, 1949 in the pending accounting suit between Cold Metal and United (Equity No. 2991), but the District Court dismissed such pleading. On appeal from the order of dismissal, the matter was remanded to the District Court where apparently it now awaits trial of the issues involved. *Cold Metal Process Co. v. United Engineering & Foundry Co.*, decided June 8, 1951, 3rd Cir., 190 F. 2d 217.

In asserting that the courts have recognized that United has no rights under patent '016 and that the claims of patent '016 are not involved in the 1927 agreement, Cold Metal points particularly to the case of *United States v. Cold Metal Process Co.* (D. C. N. D. Ohio E. D.)

62 F. Supp. 127, aff'd. 6th Cir., 164 F. 2d 754. In that case the Government unsuccessfully attempted to have patents '016 and '195 cancelled on the ground of fraud in their procurement, or for mutual mistake in their issuance. The Government contended in that case that patent '016 was involved in and affected by the 1927 agreement and the alleged fraudulent acts involved in the procurement of patent '195. Judge Shackelford Miller, Jr., sitting specially in this Court, found in Fact Finding 13 (62 F. Supp. 127, 135) as follows:

> "This patent ('016) was directed to an entirely different invention than patent '195. Its claims were not involved in the agreement between United and Cold Metal or the procedure relating to the procurement of the claims of patent '195. Neither that agreement nor the ensuing procedure in any way induced the issuance of patent '016 with the claims contained therein, and the prosecution of the claims of patent '016 was separate and distinct from the prosecution of the claims to the '195 invention."

The charges made by the Government against Cold Metal in that case and the issues before the Court primarily involved the procedure relating to the procurement from the Patent Office of the claims of patents '195 and '016. No question as to the scope of United's license under the 1927 agreement, or the rights of United's customers, or whether certain mills were included within the boundaries of such license appears to have been adjudicated. (See 62 F. Supp. 127, pp. 138-141). The issues in the Government's cancellation case were so materially different from the issues here involved that I am not persuaded that Judge Miller's aforementioned finding has the effect claimed for it by Cold Metal. It is one thing to conclude, as Judge Miller did in the cancellation case,

that the claims of patent '016 were not involved in the 1927 agreement for the purpose of determining the issue of the fraudulent procurement of the patents, and quite a different thing to construe the scope of United's exclusive license under that agreement for the purpose of determining whether certain mills claimed to infringe patents '016 and '195 come within the boundaries and protection of the license expressly defined therein. In view of the difference in the issues involved, I see nothing inconsistent between Judge Miller's finding in the Government's cancellation case and the conclusions reached in the present case as to the scope of United's exclusive license under the 1927 agreement.

Cold Metal also relies on Judge Picard's decision in the *McLouth* case (41 F. Supp. 487). In that case, McLouth, which had a license from Cold Metal under patent '016, purchased a cold rolling mill from United with Cold Metal's approval, but refused to pay royalties to Cold Metal. In a suit by Cold Metal for royalties under the license, McLouth contended that the mill did not come within the scope of patent '016 and also that it was exempt from paying royalties because the '016 patent was necessary to the proper functioning of patent '195 under which it was also licensed by Cold Metal. Judge Picard rejected McLouth's contention, holding that the mill came within patent '016 and, therefore, that McLouth was required to pay royalties to Cold Metal under the license. The court also disagreed with McLouth's position that it was exempt from paying royalties because '016 was necessary to the proper functioning of '195, saying, that United never claimed any rights in patent '016, citing *Cold Metal v. United*, 3rd Cir., 107 F. 2d 27.

Report of Special Master.

I am unable to find any support in the facts of the *McLouth* case for Cold Metal's position here in regard to the scope of United's license under the 1927 agreement with Cold Metal. Judge Picard's decision in that case rests on the finding that the cold mill there involved came within patent '016, under which McLouth was licensed by Cold Metal, and accordingly he held that McLouth was bound to pay royalties to Cold Metal under the license. On appeal, the Court of Appeals for the Sixth Circuit affirmed Judge Picard's ruling and held, because of the license, that it was unnecessary to consider whether McLouth's cold mill came within the coverage of patent '016. *Cold Metal v. McLouth,* 6th Cir., 170 F. 2d 369, 380. Neither decision, however, is based on the 1927 agreement between Cold Metal and United, and neither decision in my opinion lends support to Cold Metal's contention in the present case that United, and United's customers, although granted immunity by the 1927 agreement and license from infringement of the claims of patent '195, did not acquire immunity by such license from infringement of the claims of patent '016 which otherwise would be infringed by operation under the grant.

Cold Metal also seeks to avoid the effect of United's license by contending that defendant did not purchase the patented mills from United but only purchased parts thereof, and for that reason maintains that the mills here involved do not come within the protection of United's license. There is no substance to that contention. Even apart from the fact that all of the accused mills before the court in the present case are also involved in the accounting proceeding brought by Cold Metal against United and now in progress before the Master appointed by the District Court for the Western District of Pennsylvania in Equity No. 2991, the evidence here clearly shows that with respect to all the mills involved

in this case, including Mill No. 40 as it was originally built and as later reconstructed, United designed to defendant's requirements and order and defendant purchased from United the essential elements of the mill structure described in and covered by the claims of the patents in suit, including the several mill stands, together with the necessary working rolls, backing rolls, bearings, reels, and other auxiliary parts and equipment constituting the patented mills (R. 3711 et seq.; 4063-5, Ex. D-44, D-46, D-54).

True, the mill motors, reel motors, drives and other electrical controls and equipment used with the patented mills but which constitute no part of Steckel's asserted inventions as claimed in patents '016 and '195, were purchased by defendant directly from the manufacturers of such equipment and were installed by defendant with the aid of servicemen from the electrical suppliers (R. 4084-5). However, even as to the motors United determined the requirements, which defendant followed (R. 3766, 4063-4, 4082-5).

Surely, Cold Metal would agree that infringement of the claims of the patents in suit could not be avoided merely because an infringer, although using the patented mills and methods and practicing the claimed inventions, changed the conventional electric motor drives and the customary electrical controls and used some different equipment or even used a different form of energy for supplying the driving power.

In any event, inasmuch as the motors and other electrical controls and equipment used with the patented mills are not covered by the claims of the patents in suit and form no part of the substance of Steckel's asserted inventions, the fact that such equipment was not purchased from United does not, in my opinion, exclude the patented mills from the protection of United's license.

Report of Special Master.

Inasmuch as all of defendant's accused mills before the Court in the present action embody one or more of the common subject-matter claims of patent '195 and are 4-high hot mills or 4-high cold mills in which the major portion of the power required by a roll stand is supplied to the rolls directly and not through tension by pulling on the strip, such mills and their operations come within United's exclusive license from Cold Metal as expressly defined in the agreement dated June 20, 1927 and, since all such mills were purchased by defendant from United and therefore come within the protection of United's license, it is my conclusion that plaintiffs are foreclosed by such license from obtaining a judgment of infringement against defendant in this case, even if the patents in suit are valid and were infringed.

FINDINGS WITH RESPECT TO THE JUNE 20, 1927 AGREEMENT

Upon consideration of the evidence I make the following findings with respect to the agreement dated June 20, 1927 between Cold Metal Process Company and United Engineering & Foundry Company (Ex. D-31) and its effect upon the issues involved in the present case:

1. By the express terms of the 1927 agreement Cold Metal granted to United an exclusive license to make, use and sell, under the common subject-matter claims which eventuated in patent '195, rolling mills of a certain defined character in a clearly defined field, viz., 4-high hot mills and 4-high cold mills in which the major portion of the power required by a roll stand is supplied to the rolls directly and not through tension exerted on the material for pulling it through the rolls.

2. Cold Metal retained for itself all rights with respect to mills embodying those same common subject-matter claims and operated in such a way that the major portion of the power is supplied through tension by pulling on the strip.

3. In view of the express terms of the 1927 agreement, the grant to United under the common subject-matter claims of patent '195 carried with it, by necessary implication and to the extent necessary to permit the licensee, or its customers, the full use and enjoyment of the specific grant, a license under those claims of patent '016 which would be infringed by operation under the grant, namely, claims 11, 12 and 24 through 26.

4. With respect to the accused mills, defendant purchased from United all the essential elements of the mills *per se* described in and covered by the claims of the patents in suit, including the several mill stands, working rolls, backing rolls, bearings, reels, and other auxiliary parts and equipment constituting the patented mills. The only parts which defendant did not purchase from United were the mill motors, reel motors, drives, electrical controls and equipment used on the patented mills, which parts and equipment are not covered by the claims of the patents in suit and form no part of the substance of the asserted inventions.

5. The patented mills now before the court and asserted by Cold Metal to infringe upon the claims in suit of patents '016 and '195 were purchased by defendant from United and therefore defendant is entitled to enjoy the same rights, privileges and immunities granted to United with respect to all mills so purchased and coming within the scope of United's exclusive license as defined in the 1927 agreement.

regardless of whether United failed to assert, or may now be estopped from asserting, its rights as licensee under the 1927 agreement with respect to mills embodying the subject-matter of the claims of patent '016 and coming within the express terms of the grant.

6. All the accused mills before the court are within United's exclusive field of license as defined in the license agreement dated June 20, 1927 in that, according to the evidence, all such mills embody one or more of the claims of patent '195, i.e., the common subject-matter claims, and are operated in such a way that the major portion of the power required by each roll stand is supplied to the rolls directly and not through tension by pulling on the strip.

7. According to the evidence none of the accused mills is operated in a way to trespass upon the rights retained by Cold Metal; that is to say, no such mill is operated in such a way that the major portion of the power required by a roll stand is supplied through tension by pulling on the strip.

8. Under the circumstances, plaintiffs are foreclosed by the license from any recovery for infringement against the defendant in this action, even if the patents in suit are valid and were infringed.

* * * *

THE LICENSE DEFENSE

24. The patented mills now before the court and asserted by Cold Metal to infringe upon the claims in suit of patents '016 and '195 were purchased by defendant from United Engineering & Foundry Company and defendant

is entitled to enjoy the same rights, privileges and immunities granted to United with respect to all mills so purchased and coming within the scope of United's exclusive license as defined in the 1927 agreement, regardless of whether United failed to assert, or may now be estopped from asserting, its rights as licensee under the 1927 agreement with respect to mills embodying the subject-matter of the claims of patent '016 and coming within the express terms of the grant.

25. By the express terms of the June 20, 1927 agreement, Cold Metal granted to United Engineering & Foundry Company an exclusive license under the common subject-matter claims which eventuated in patent '195, to make, use and sell, rolling mills of a certain defined character in a clearly defined field; namely, 4-high hot mills and 4-high cold mills in which the major portion of the power required by a roll stand is supplied to the rolls directly and not through tension exerted on the material for pulling it through the rolls.

26. Cold Metal retained for itself all rights with respect to mills embodying those same common subject-matter claims and operated in such a way that the major portion of the power is supplied through tension by pulling on the strip.

27. By the express terms of the 1927 agreement, the grant to United under the common subject-matter claims of patent '195 carried with it, by necessary implication and to the extent necessary to permit the licensee, or its customers, the full use and enjoyment of the specific grant, a license under those claims of patent '016, which would

be infringed by operation under the grant, namely, claims 11, 12 and 24 through 26.

28. All of the accused mills before the court, both single-stand and tandem, are within United's exclusive field of license as defined in the license agreement dated June 20, 1927, in that all such mills embody one or more of the common subject-matter claims, i. e., the claims of patent '195, and are operated in such way that the major portion of the power required by each roll stand is supplied to the rolls directly and not through tension exerted on the material for pulling it through the rolls.

29. None of the accused mills is operated in a way to trespass upon the rights retained by Cold Metal, in that no such mill is operated in such a way that the major portion of the power required by a roll stand is supplied through tension by pulling on the strip.

30. Plaintiffs are foreclosed by Cold Metal's license to United from any recovery for infringement against the defendant in this action, even if the patents in suit are valid and were infringed.

31. Defendant is entitled to judgment dismissing plaintiffs' complaint.

Recommendations

By reason of the findings and conclusions herein set forth, the undersigned respectfully recommends:

1. That defendant's motion to dismiss, made at the close of the plaintiffs' case in chief, be overruled.

2. That judgment be entered dismissing plaintiffs' complaint for the reason that plaintiffs are foreclosed by Cold Metal's license to United from any recovery for infringement against defendant in this action, even if the patents in suit are valid and were infringed.

Respectfully submitted,

WILLIAM L. WEST
William L. West, Special Master
c/o The National City Bank
of Cleveland
Cleveland 1, Ohio

Dated at Cleveland, Ohio,
this 18th day of September, 1952.

* * * *

Portion of the Opinion of the District Court, Dated and Filed June 18, 1954, Dealing with the License Defense

(Joint Appendix I, 346-360)

LICENSE DEFENSE

However, even though '195 and '016 are valid patents and would otherwise have been infringed, Republic contends that it is immune from any infringement proceedings by virtue of the following license agreement of June 20, 1927 between Cold Metal and the party from whom Republic purchased the accused mills, United Engineering & Foundry Company:

> "Whereas, both parties own certain applications pending in the United States Patent Office relating to 4-high rolling mills and the rolling of thin material; and
>
> "Whereas, it has been suggested to the parties by their attorneys that it may be possible to secure claims to a certain subject-matter common to both parties' applications;
>
> "Now, Therefore, in consideration of the sum of one dollar ($1.00) and other good and valuable consideration paid by each party to the other party, the receipt of which is hereby acknowledged, and in further consideration of the mutual covenants hereinafter contained, the parties hereto agree for themselves, their successors and assigns as follows:
>
> "1. The parties will, through their appropriate officers, immediately hold a conference at which their patent attorneys, Byrnes, Stebbins & Parmalee, shall be authorized by both parties to suggest claims covering certain subject-matter common to both parties' applications, and which it is understood are not at the present time being presented in Cold Metal's applications; together with a plan for securing the allowance of such claims;

"2. Cold Metal shall not, after such conference, present in its application claims of the scope suggested at the conference, or directed to the subject-matter common to both parties' applications, if such claims are broader or of different scope than the claims now presented in Cold Metal's application, except with the agreement and cooperation of United.

"3. When and if such claim or claims to common subject-matter are granted in any patent issued on Cold Metal's applications, Cold Metal shall grant to United a license to make, use and sell rolling mills under such claim or claims, which license shall be exclusive to United for 4-high hot mills and for 4-high cold mills, in which the major portion of the power required by a roll stand is supplied to the rolls directly and not through tension exerted on the material for pulling it through the rolls; Cold Metal, however, reserving the right to make or have made for its own use and to use in its own plant or plants such hot and cold mills * * *."

Just prior to the execution of the agreement both Cold Metal and United had applications pending in the Patent Office relating to 4-high rolling mills and the rolling of thin material. The Cold Metal application was Steckel's original application, filed June 30, 1923, upon which '016 eventually issued on January 14, 1930. The United application was the Biggert & Johnson application, filed April 20, 1926 and shortly thereafter assigned to United.

Steckel's original application had contained three claims addressed primarily to the mill itself, comprising relatively small reducing rolls, backing rolls and anti-friction mounting, but not developing the tension subject matter. However, the Patent Office rejected these three claims for lack of invention and they were cancelled from Steckel's original application on April 6, 1926, with the result that all the

claims of that application were then addressed to the driving of the mill by tension.

The Biggert & Johnson application, which was later filed, disclosed claims which were similar to those which had just previously been cancelled from the Steckel application. These claims were based upon the prior installation and use at Rome, New York, in December, 1925 and January 1926 of a 4-high single-stand cold rolling mill, having working rolls, larger diameter backing rolls, and anti-friction or roller bearings on the necks of the backing rolls. At this time Steckel had not yet opened his mill to public inspection, and it can be assumed that the Biggert & Johnson mill was developed independently of the Steckel mill.

It so happened that both the Steckel and the Biggert & Johnson applications were being processed by the same firm of patent attorneys, different members being in charge of each application. However, it was not until shortly after the Biggert & Johnson application was filed that the firm became aware that it was handling applications which disclosed "common subject-matter" and was representing clients with conflicting interests. Having informed the two parties of this somewhat embarrassing turn of events, without revealing to either the other's application, a meeting was arranged at the request of both parties at which the June 20, 1927 agreement was executed by Cold Metal and United in an attempt to settle the conflict between them. With the consent of the parties, the law firm involved in this arrangement continued to represent them both in the prosecution of the respective applications.

It was decided to press for the allowance of the "common subject-matter" claims in the Biggert & Johnson application rather than in the Steckel application because United already had experienced commercial success with its mills while Steckel had only been operating in a small way, and

it was thought that the Biggert & Johnson application might therefore be treated more favorably.

On December 27, 1927 Biggert & Johnson patent 1,654,325 issued to United, covering 4-high single-stand and tandem hot or cold mills having working rolls, larger diameter backing rolls, and anti-friction or roller bearings on the backing roll necks. Immediately thereafter, all of these claims—with the exception of one—were copied by the law firm in question into the Steckel application and a request for an interference was made. Although similar claims had previously been cancelled from the Steckel application, the Patent Office now decided that there was a basis of disclosure in the Steckel application of the claims which had been allowed in the Biggert & Johnson patent, and it declared an interference. United refrained from contesting the interference, and the claims were awarded to Steckel by default. Pursuant to a requirement of division made by the Patent Office, these "common subject-matter" claims were then cancelled from the original Steckel application and were embodied in a divisional application upon which '195 issued to Cold Metal on October 21, 1930.[11]

Upon the issue to Cold Metal of this patent covering the "common subject-matter" claims, the exclusive license to United referred to in the agreement came into being. According to Paragraph 3, the scope of this license is "to make, use and sell rolling mills under such claims, which license shall be exclusive to United for 4-high hot mills and for 4-high cold mills, in which the major portion of the power required by a roll stand is supplied to the rolls di-

[11]In an action by the Government for cancellation of '195 and '016 because of fraud in their procurement and because of mutual mistake, the Court dismissed the case and exonerated all parties of any misconduct. *United States v. Cold Metal Process Co.*, 62 F. Supp. 127, aff'd 164, F. 2d. 754.

rectly and not through tension exerted on the material for pulling it through the rolls * * *."

It is Republic's position that by virtue of this license United was entitled to make, use and sell mills of the type described in the foregoing passage and that as long as the mills conformed to the characteristics therein defined, they were free of any claim of infringement of patents '195 and '016. There is no dispute that if the license agreement so protected United, and that if Republic purchased the accused mills from United, Republic would be entitled to a similar immunity.

However, plaintiff's deny both that the license agreement has the asserted scope and that Republic purchased the accused mills from United. As to the scope of the license, plaintiffs maintain that it was a license under certain claims only and not a license to make specific mills; that these claims were defined as the "common subject-matter" claims and related to the mill itself without disclosing the use of tension as a means of driving the mill; that these "common subject-matter" claims were all subsequently embodied within '195; and that United, therefore, acquired rights only under '195. If plaintiffs' version of the license grant is correct, the accused mills acquire no protection against the claims of '016 even though the major portion of the power is supplied to the rolls and not through tension, and they are protected under '195 only to the extent that they were operated with less than 50% forward tension.

It is true that the only express license which the parties had in mind at the time of the execution of the agreement was one which would cover "common subject-matter" claims, and that these claims were later embodied in '195. On the other hand, it is equally clear that the

parties contemplated that United would be authorized to make, use and sell a specific type of mill. This is borne out by the following straightforward declaration of Paragraph 3 of the license agreement:

> "* * * which license shall be exclusive to United for 4-high hot mills and for 4-high cold mills, in which the major portion of the power required by the roll stand is supplied to the rolls directly and not through tension exerted on the material for pulling it through the rolls * * *."

Plaintiffs seek to overcome this apparent meaning of the grant by arguing that it was intended only as a limitation upon the rights granted under the "common subject-matter." Such reasoning might be persuasive if the "common subject-matter" claims did in fact disclose the tension subject matter. Then the foregoing passage relating to the specific mills might be construed as an attempt to allocate the use of the art disclosed in such claims and as intended to confer rights only under such claims and no others. However, the "common subject-matter" claims did not disclose the use of tension, and this language is therefore more consistent with an intention to grant an exclusive license to practice the art which such claims did disclose in connection with the manufacture, use and sale of the specific mills described in the agreement.

It must be remembered that at the time of the execution of the license agreement, United had already installed at Rome, New York a mill of the type here accused. That mill was equipped with reels and reel motors for applying tension to the strip, although the testimony is that tension was there primarily used for winding and keeping the strip straight. In any event, even small amounts of tension assist in driving the mill, and the boundary between

"substantial" tension, such as is presently disclosed in '016, and just sufficient tension to wind and to keep the strip straight is not clearly defined. We can assume that United intended to preserve its right to use at least the tension values that were then being used with its Rome mill. On the other hand, although it has been found that the original Steckel application disclosed a basis for broader claims to tension, at the time of the execution of the license agreement Cold Metal was emphasizing driving the mill "entirely" or "principally" by tension, and it was not until after the date of the agreement that amendments unmistakably broad enough to include the operation of the accused mills first made their appearance in the Steckel application. Such being the situation, it would be consistent with their closest interests for the parties to divide the use of tension on the mills in the manner attempted in the license agreement, granting to United the right to use up to 50% tension on the mills which it manufactured and reserving to Cold Metal amounts in excess thereof.

Yet, plaintiffs now assert the right to nullify this advantage given to United under the agreement by maintaining that United acquired immunity to use up to 50% tension on the described mills only under a patent embodying the "common subject-matter" claims—'195—and that Cold Metal is at liberty to enforce '016 against United to prevent it from manufacturing, using and selling these mills in the manner contemplated by the agreement. It is not to be inferred that Cold Metal intended to grant only an illusory right to United. United has already parted with the consideration which it agreed to give for the rights in dispute.[12]

[12]As was declared in a prior case, *Cold Metal Process Co. v. United Engineering & Foundry Co.*, 107 F. 2d 27, 31-32:

> "It is now impossible to restore Cold Metal and United to their status quo at the time they entered into the agreement on

and Cold Metal will not now be seen to take away with its left hand that which it had promised to deliver with its right.

When the agreement was entered into, there was a possibility that United might succeed in acquiring a patent to the "common subject-matter" claims. If it had so succeeded, a substantial shadow would have been cast on the utility of all of '016, since that patent of necessity embraces the essential ingredients of the mill disclosed in '195. To avoid such an eventuality, Cold Metal could well have seen fit to make concessions in the field of tension under '016 to preserve to itself at least part of the benefits of that patent. That it did in fact reserve to itself valuable rights under the patent is confirmed by the evidence which indicates that Cold Metal manufactured and operated or sold mills in which

---

June 20, 1927, when each had an application in the Patent Office for 4-high roller bearing mills, and neither knew which record date was earlier or what claims were included or disclosed in the application of the other. Application for the Steckel patent had been assigned to Cold Metal and the Biggert & Johnson application had been assigned to United. As a result of the agreement of 1927 United was deprived of the right to contest the granting of the claims which were copied from its own (Biggert & Johnson) application into the Steckel patent.

* * * *

"The only benefit which United received for its forbearance to contest the interference proceeding was the exclusive license which it secured by the agreement of June 20, 1927. This United is seeking to retain and Cold Metal is seeking to take away. Each party in signing the agreement doubtless thought it was getting something from, and was giving something to, the other. The one was getting a patent; the other an exclusive license under it. Cold Metal is unwilling to surrender the Steckel patent and United cannot be asked to give up its exclusive license. Cold Metal with a patent and United with an agreement giving it an exclusive license are in the position in which they placed themselves and we should leave them there."

all of the power was applied through forward tension, a type of mill which was not covered by the license granted to United.

At the time of negotiations preceding the agreement, the parties were necessarily bargaining in the dark and United was not aware of the contents of the Steckel application and that it contained the basis for claims which would make ineffectual the rights bargained for in the agreement. If it had been, it is to be assumed that express allowance would have been made in the agreement for such a circumstance. But even though not expressly provided for in the agreement, where it is contemplated that the licensee shall be able to make, use and sell a given device in a specified manner, the licensor is estopped from asserting against the licensee any other patent which it may then own or later acquire, the effect of which would be to deprive the licensee of the rights bargained for. As Judge Simons said in *Frederick B. Stevens, Inc. v. Steel & Tubes, Inc.*, 114 F. 2d. 815, 819-820:

> "There is ample authority for the rule that where the owner of a patent grants to a licensee the right to use a patented machine, the grant carries with it, by necessary implication, a license under any other patent of the licensor which would be infringed by operation under the grant. *Victory Bottle Capping Co. v. O. & J. Machine Co.*, 1 Cir., 280 F. 753; *Scoville Mfg. Co. v. Radio Corp. of America*, D. C. N. Y., 9 F. Supp. 239; *Edison Electric Light Co. v. Peninsular Light, Power & Heat Co., et al.*, C.C. Mich., 95 F. 669. The defense of implied license must be sustained."

The same conclusion was reached in *National Rubber Machinery Co. v. McNeil Machine & Engineering Co.*, (C. A. 6, 1942), 132 F. 2d. 436 where the Court declared

that the licensee was immune from the enforcement of a certain patent of the licensor, which issued subsequent to the license agreement, even though in that case the patent in question was expressly excepted from the scope of the license in one of the schedules attached to the agreement.

There is no merit in plaintiffs' argument that the two foregoing cases are not applicable to the instant situation. Plaintiffs maintain that an implied license was declared to exist in those cases because such a finding was necessary to enable the licensee to make full use of the rights conferred under these agreements, but that in the instant case United was able to exploit patent '195 without invading the tension subject matter of patent '016. Although this is true as far as it goes, it begs the crucial question which must be decided—could United exploit the rights granted under *the license agreement* without the right to use the tension subject matter of '016? By the express terms of this agreement United was granted the right to practice the art disclosed in certain claims for the purpose of manufacturing, using and selling a specific type of mill. Since it is impossible to make, use and sell such a mill without infringing the tension subject matter of another of Cold Metal's patents, it is necessary to confer upon the licensee an immunity under this other patent, so as to breathe life into the rights acquired through the license.

Plaintiffs' argument that United has acquiesced in their construction of the license agreement by its failure to assert rights under '016 in the same manner as it has done with respect to '195 is certainly not conclusive of the nonexistence of such rights. And, in any event, there is a good reason for this. The license agreement did not give to United rights under '016 of the same stature as the rights which it acquired under '195. The license agreement gave to United an exclusive license to use the art of '195 in con-

nection with its manufacture, use, and sale of a certain type of mill. That was the authority upon which United was able to protest against the use of such art in the designated manner by anyone else. However, the license agreement did no more than to confer upon it an immunity from the enforcement of any other patent of Cold Metal—including '016—which might nullify the rights acquired through the license agreement. This has been called "an equitable implied license."[13] Certainly, it is not such a right as the licensee is capable of asserting aggressively against the rest of the world, and there is no basis for reading into United's failure to do so the meaning which plaintiffs here attempt.

In none of the prior litigation between Cold Metal and United was there ever an adjudication that United did not acquire such an immunity under '016 through the license agreement. *Cold Metal Process Co. v. United Engineering & Foundry Co.*, 107 F. 2d. 27, was an action for infringement of '195 only, so there could be no determination of whether the license agreement conferred any immunity under '016. In the course of discussing litigation between different parties, the Court there declares on page 30 that of certain other Steckel patents involved in other litigation, United appeared to have been interested only in '195. This ambiguous statement is, indeed, a slender thread for Cold Metal to hang upon.

Similarly, in *Cold Metal Process Co. v. McLouth Steel Corporation*, 41 F. Supp. 487, aff'd 170 F. 2d 369, the Court makes the following statement: "United never claimed any rights in '016." This is entirely consistent with the conclusion that United did not enjoy any rights which it could affirmatively assert but at most enjoyed a defensive immu-

[13]See *Frederick B. Stevens, Inc. v. Steel & Tubes, Inc.*, 114 F. 2d. 815, 819.

nity. It must here be noted that Cold Metal never gave United occasion to plead an immunity such as it did acquire since Cold Metal has never sought to enforce '016 against United.

Furthermore, in *McLouth* United was not a party. McLouth Steel Corporation was contending that because it had purchased, for its own convenience, a patented mill from United, it was relieved of its obligation under its independent license agreement with Cold Metal to pay royalties to Cold Metal for the use of such mill. However, McLouth was there denied the right to vary, by its voluntary dealings with a third party, contractual duty to Cold Metal to pay the agreed-upon royalties for the use of the patented mill, whatever rights might have accrued from such dealings with United in the absence of such an independent contractual duty. In the instant case, the legal and equitable right are quite different. Republic is not under an independent license to Cold Metal, and there are, therefore, no grounds for denying to Republic the same scope of the estoppel against Cold Metal's enforcement of '016 as is enjoyed by United, from whom Republic purchased the patented mills.

United States v. Cold Metal Process Company, 62 F. Supp., aff'd 164 F. 2d. 754, is wide from the point. That was a proceeding to cancel '016 and '195 for fraud and for mutual mistake. Finding No. 13 of the trial court was a clear statement of the undisputed facts—that '016 was independent in origin and processing from '195 and was not involved in any arrangement contemplated by the June 20, 1927 agreement for procuring the issuance of '195. Any misconduct connected with such agreement would not, therefore, reflect on '016. Such a finding is in no way inconsistent with the conclusion that the June 20, 1927 license agreement, nevertheless, did contemplate that the licensee

would manufacture certain specific devices so as to estop the licensor from asserting '010 against the licensee and purchasers from the licensee.

The latest in the series of cases is connected with Cold Metal's accounting proceeding against United now pending in the Western District of Pennsylvania (Equity No. 2901). Originally, that suit only involved '195. On March 28, 1949 United filed a "cross-complaint" and "ancillary" seeking injunctive relief and an accounting for collections made by Cold Metal from United's customers under threat of both '010 and '195, the use of which patents United alleged were within the scope of the license agreement. This is the first case in which the issue has arisen as to whether the use of '010 came within the scope of the license agreement. The District Court dismissed United's pleading on the ground that it was not ancillary to the accounting proceeding. 92 F. Supp. 596. The Court of Appeals for the Third Circuit reversed and remanded for a determination of whether United and its customers did acquire rights under '010 by virtue of that license agreement. 190 F. 2d. 217. The matter has not yet been decided by the District Court.

Since I have already indicated what I deem to be the proper formula to measure the ratio of forward tension to total driving power, and since by this formula it appears that on all of the accused mills the major portion of the power required by each roll stand was supplied to the rolls directly and not through tension exerted on the material for pulling it through the rolls, I must concur with the special master's conclusion that all of the accused mills come within the scope and protection of the license agreement.

I find that the essential elements of the mill structure described in and covered by the claims in suit, together

with all the auxiliary parts and equipment constituting the patented mills, were manufactured by United and were purchased from United by Republic. The fact that Republic purchased the mill motors and reel motors and other incidental electrical controls and equipment directly from other manufacturers rather than from United in no way affects this conclusion. These items are not covered by the claims of the patents in suit and constitute no part of the substance of the asserted inventions. Republic need not have purchased from United each and every item used on the accused mills in order to be entitled to share United's cloak of immunity. It is sufficient that it purchased from United such apparatus as is described in the patents. The accused mills, therefore, are immune from any claim of infringement of '195 and '016 by virtue of the June 20, 1927 license agreement between Cold Metal and United.

Notwithstanding this disposition of the case, it should be noted that at the close of the presentation of Cold Metal's case before the special master, Republic moved to dismiss this action on the ground that certain provisions of plaintiffs' license contract with other users of the patented mills violated the antitrust laws and constituted misuse of the patents in suit. I find no merit in this position, and the special master properly denied such motion.

An order consistent with the views herein expressed may be presented for signature.

THEODORE LEVIN
United States District Judge
Sitting in the Northern
District of Ohio
By Designation

Dated: June 18, 1954

Affidavit of John N. Cooper

IN THE

Supreme Court of the United States

No. 358

October Term, 1956

THE COLD METAL PROCESS COMPANY and THE UNION NATIONAL BANK OF YOUNGSTOWN, OHIO, TRUSTEE,
Petitioners,

vs.

REPUBLIC STEEL CORPORATION,
Respondent.

STATE OF NEW YORK }
COUNTY OF NEW YORK } ss.:

JOHN N. COOPER, being first duly sworn, deposes and says:

1. I am an attorney at law, admitted to practice in all Courts of the State of New York and in the United States Courts of Appeals for the Second and Sixth Circuits as well as in various United States District Courts.

2. I have been and still am one of the counsel for Republic Steel Corporation, the respondent herein, and I participated in and am familiar with all the proceedings had in this action from prior to the trial before the Special Master to date.

Affidavit of John N. Cooper

3. I am one of counsel for Aluminum Company of America in the pending action [illegible] Eastern District of Tennessee, Northern Division, refer[illegible] in the Affidavit of William H. Webb attached to the petition herein (Pet. App. A, 110a, 111a). I am familiar with the proceedings had to date in that litigation. Ques[illegible] IB(1) and IC, as here posed by Cold Metal, rise and will be considered in a different factual context in the Aluminum case than in the Republic case.

4. I am not of counsel in the other cases referred to in the Affidavit of William H. Webb aforesaid but it is my understanding that such cases have not been tried and the factual context in which Questions IB(1) and IC might arise is not known.

JOHN N. COOPER

Sworn to and subscribed before me, a notary public in and for the State and County aforesaid, this 26 day of September, 1956.

[SEAL]

GRAYCE A. WALTER
Notary Public, State of New York
No. 41-4147285
Qualified in Queens County
Cert. filed in N. Y. County Clerk's Office
Commission Expires March 30, 1957

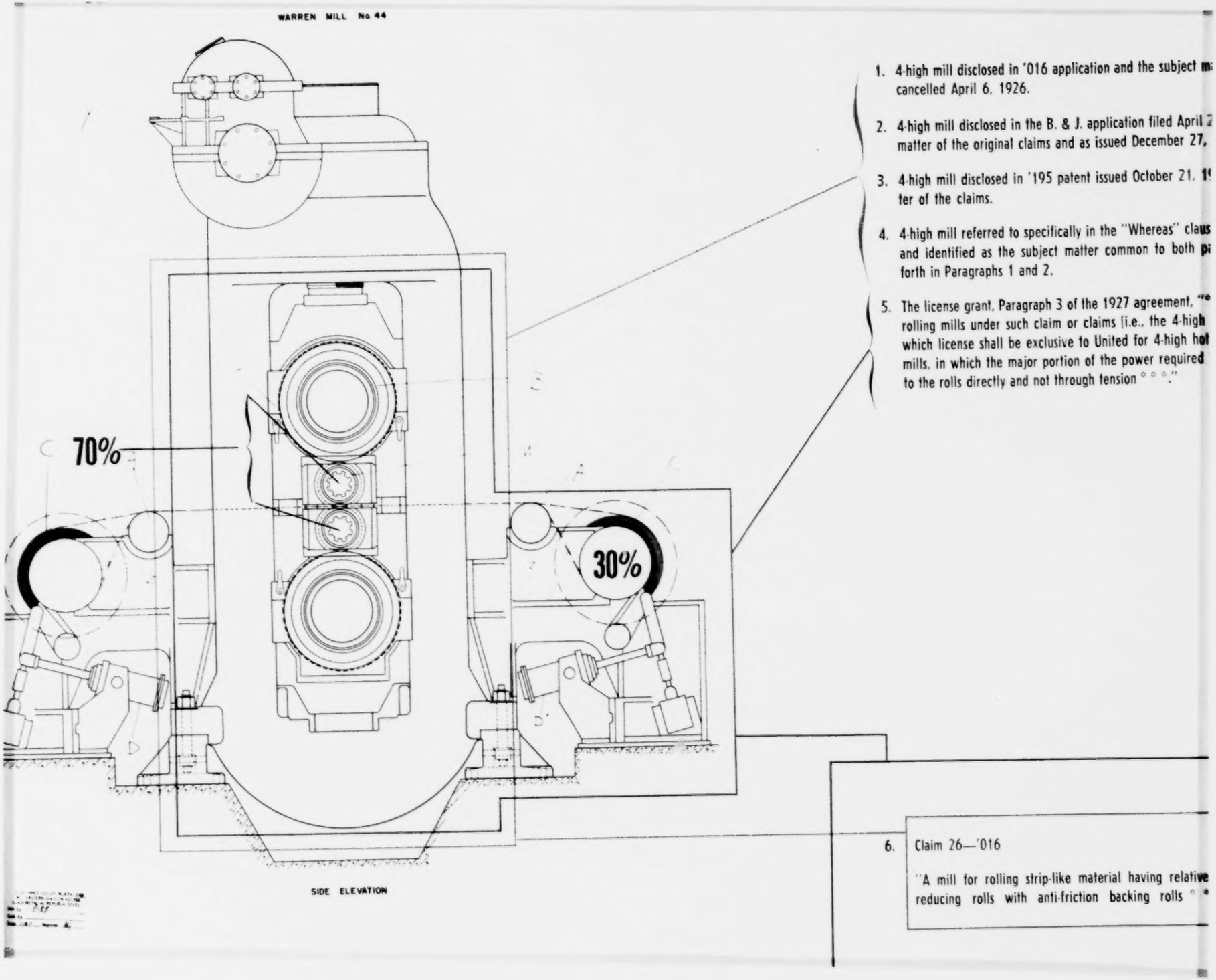
WARREN MILL No. 44
70%
30%
SIDE ELEVATION
1. 4-high mill disclosed in '016 application and the subject m cancelled April 6, 1926.
2. 4-high mill disclosed in the B. & J. application filed April matter of the original claims and as issued December 27,
3. 4-high mill disclosed in '195 patent issued October 21, 1 ter of the claims.
4. 4-high mill referred to specifically in the "Whereas" claus and identified as the subject matter common to both p forth in Paragraphs 1 and 2.
5. The license grant, Paragraph 3 of the 1927 agreement, " rolling mills under such claim or claims [i.e., the 4-high which license shall be exclusive to United for 4-high hot mills, in which the major portion of the power required to the rolls directly and not through tension * * *."
6. Claim 26—'016
"A mill for rolling strip-like material having relative reducing rolls with anti-friction backing rolls * *

CHART I

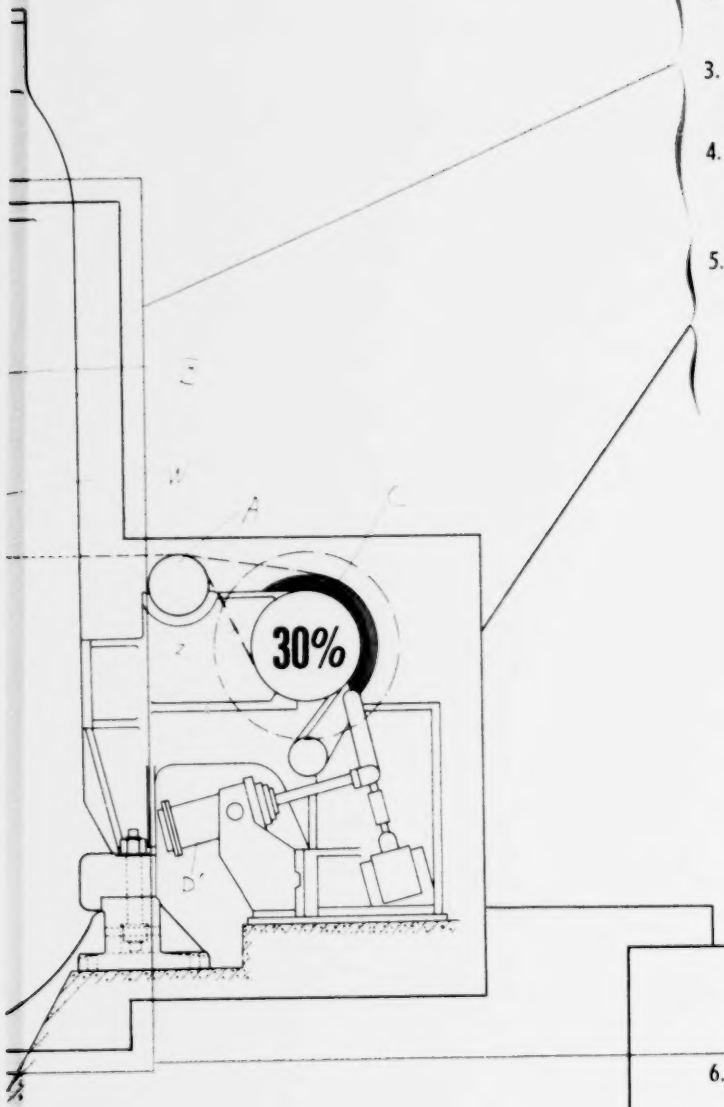

1. 4-high mill disclosed in '016 application and the subject matter of original claim 1, cancelled April 6, 1926.

2. 4-high mill disclosed in the B. & J. application filed April 20, 1926 and the subject matter of the original claims and as issued December 27, 1927.

3. 4-high mill disclosed in '195 patent issued October 21, 1930 and the subject matter of the claims.

4. 4-high mill referred to specifically in the "Whereas" clause of the 1927 agreement and identified as the subject matter common to both parties' applications as set forth in Paragraphs 1 and 2.

5. The license grant, Paragraph 3 of the 1927 agreement, "* * * to make, use and sell rolling mills under such claim or claims [i.e., the 4-high anti-friction bearing mill], which license shall be exclusive to United for 4-high hot mills and for 4-high cold mills, in which the major portion of the power required by a roll stand is supplied to the rolls directly and not through tension * * *."

6. Claim 26—'016

"A mill for rolling strip-like material having relatively small reducing rolls with anti-friction backing rolls * * * * * * arranged to be driven largely by * * tension on the delivered material."

32/19

FILED
OCT 9 1956
JOHN T. FEY, Clerk

IN THE

Supreme Court of the United States

NO. 358

OCTOBER TERM, 1956

THE COLD METAL PROCESS COMPANY and THE UNION NATIONAL BANK OF YOUNGSTOWN, OHIO, TRUSTEE, Petitioners,

v.

REPUBLIC STEEL CORPORATION, Respondent.

REPLY BRIEF FOR PETITIONERS

WILLIAM H. WEBB,
1220 Farmers Bank Building,
Pittsburgh, Pennsylvania

HOWARD F. BURNS,
1956 Union Commerce Building,
Cleveland, Ohio.

CLARENCE B. ZEWADSKI,
3053 Penobscot Building,
Detroit, Michigan
Counsel for Petitioners.

MORTON BURDEN, JR.,
1220 Farmers Bank Bldg.,
Pittsburgh, Pennsylvania
Of Counsel.

October 10, 1956

SMITH BROS. CO. INC., LAW PRINTERS, 434-436 BLVD. OF ALLIES, PITTSBURGH 19, PA.

INDEX

		PAGE
I.	Introduction	1
II.	As to Questions I-A to I-D	1
III.	As to Questions II-A to II-D	6
IV.	Conclusion	12
Appendix D		13

TABLE OF ABBREVIATIONS

R. App.	Refers to respondent's appendix.
Pet. App.	Refers to petitioners' appendix.
R. Br.	Refers to respondent's brief.
J. App.	Refers to the Joint Appendix filed in the Court of Appeals.
Pet.	Refers to the petition for *certiorari*.

IN THE

Supreme Court of the United States

NO. 358

OCTOBER TERM, 1956

THE COLD METAL PROCESS COMPANY and THE UNION NATIONAL BANK OF YOUNGSTOWN, OHIO, TRUSTEE, Petitioners,

v.

REPUBLIC STEEL CORPORATION, Respondent.

REPLY BRIEF FOR PETITIONERS

I.

INTRODUCTION.

Although respondent, in its brief, evades the real issues presented by the petition and the fact that the decision below on those issues is clearly wrong and should be reversed by this Court, nothing stated in that brief destroys or detracts from the reasons asserted by petitioners in support of the granting of a writ of *certiorari*.

II.

AS TO QUESTIONS I-A TO I-D.

Respondent's argument as to Questions I-A to I-D misrepresents the holdings below.

Respondent (R. Br. 2, 25) asserts that the "controlling ground of the decision below lay in an express limitation" of the claims to save them from invalidity and that the Morgoil bearing mills are not within the scope

of the claims as so limited.* This is wholly incorrect. The Court of Appeals made no such holding. It did not even discuss the point.

Respondent (R. Br. 27) asserts that "all tribunals below recognized the invalidity of the claims in their breadth of assertion" and (R. Br. 25-26, 30) that the Court of Appeals' holding rests on the affirmance of the express limitation of the scope of the claims "to save them from invalidity." The Court of Appeals made no such holdings and did not even discuss the point.

Respondent (R. Br. 22, 27) also misstates the Master's holding. He did not limit the claims in the manner asserted. He held the claims of patent '195 calling for an antifriction mounting infringed by respondent's Morgoil bearing mills, and held the claims of patent '016 calling for an antifriction mounting or an antifriction backing infringed by such mills (J. App. I. 224, 262-63, 218, 174). Thus, the Master held (J. App. I. 218):

> "On the other hand, the term 'anti-friction mounting' as used in the specifications and in certain claims of patents '195 and '016, being broader than the expression 'anti-friction bearing' as used in those patents, includes and covers Morgoil bearings, even though the Morgoil bearing was not invented until after Steckel's conception and until after the issuance of his patents. See *Standard Paint Co. v. Bird* (C.C. S.D. N.Y.) 175 F. 346, aff'd 182 F. 1023."

Respondent itself, at the trial, took the position that, if the claims were valid over the defense of indefiniteness,

---

* Respondent has furnished no supporting reference for this.

the Morgoil bearing mills infringed. It did not assert non-infringement. For example, it expressly stated (Pet. App. B, p. 109a):

> "Defendant does not contend that the Morgoil bearing does not come within the broad generic definition of 'antifriction mounting' (apart from a defense of indefiniteness) as presented in '016 (see Def. Main Br. pp. 185, 186) but does contend that the Morgoil bearing does not come within the definition of 'antifriction bearing' as set forth in '195 as meaning specifically cage type roller bearings (Def. Main Br. pp. 91, 92, 249-252)."

Respondent's whole argument is predicated upon the alleged limitation by the Courts below of the claims addressed to antifriction mountings or antifriction backings to cover only roller bearings or the large wheel-like structure disclosed in patent '016. While the District Court in its opinion made such a holding (J. App. I, 318, 330, 345), neither the Master nor the Court of Appeals so held.

Respondent asserts (R. Br. 23) that the Master "found that the Morgoil, due to its different *structural and operating* characteristics, was not an equivalent of the 'anti-friction bearing.'" Reference to the parts of the Joint Appendix relied upon by respondent in support of this statement shows that the Master made no such holding. The Master merely held that a Morgoil bearing was not a roller bearing or an antifriction bearing. But he also held that the Morgoil bearing is an antifriction mounting. The issue of equivalency between a Morgoil bearing, on the one hand, and a roller bearing or an antifriction bearing, on the other hand, was not even raised.

As to Questions I-A to I-D.

Respondent asserts (R. Br. 23, 26) that the District Court held the Morgoil bearing was not the equivalent of a roller bearing. This is wholly incorrect. The District Court, as pointed out in the petition, based its holding of non-infringement upon the grounds that the terms "roller bearing," "antifriction bearing" and "antifriction mounting" mean the same thing, namely, a roller bearing, and that the Morgoil bearing mills could not infringe since the Morgoil bearing was not developed until after the patents in suit issued (J. App. I. 327-28). The District Court did not even discuss the matter of equivalency, which respondent now says is the foundation of the District Court's decision.

Of course, whether a Morgoil bearing *per se* is or is not the equivalent of a roller bearing or an antifriction bearing is not the real issue here, for the claims in question are not limited to roller bearings or antifriction bearings. They employ the broad terms "antifriction mounting" and "antifriction backing"; and these terms, as the Master held, clearly encompass Morgoil bearings. The Court of Appeals erred in not arriving at this same conclusion, stating that it felt it unnecessary even to consider the meaning of the terms "antifriction mounting" and "antifriction bearing" (Pet. App. A, p. 26a).

The statement of the Court of Appeals that the Morgoil bearing "is not an equivalent of the roller bearing" is obviously the result of a mere comparison of the two types of bearings from the structural standpoint. But, whether the bearings, as bearings, can be considered equivalents is immaterial here, *the real question being whether the substitution of a Morgoil bearing for a roller bearing in the patented combination results*

in a different combination although the combinations, irrespective of whether the bearings are Morgoil bearings or roller bearings, perform the same strip rolling functions in the same way and accomplish the same results.

The Court of Appeals has completely misconceived the nature of the doctrine of equivalents as applied to combinations, as is apparent from this Court's decision in *Cochrane v. Deener,* (1876) 94 U.S. 780, wherein this Court stated (pp. 789-90):

> "Though some of the corresponding parts of the machinery, designated in this combination, are not the same in point of form in the two bolting apparatuses, and, separately considered, could not be regarded as identical or conflicting, yet having the same purpose in the combination, and effecting that purpose in substantially the same manner, they are the equivalents of each other in that regard. The claim of the patent is not confined to any particular form of apparatus, but (in regard to the valves, for example) embraces generally any valves for feeding and delivering the meal without allowing the air to pass through."

The failure of the Court of Appeals to apply the principles enunciated in *Cochrane v. Deener, supra,* stems directly from its erroneous conclusion that this Court had overruled that case in the *Halliburton* case (see Pet. pp. 13-15)

At to Questions II-A to II-D.

III.

AS TO QUESTIONS II-A TO II-D.

Regarding Questions II-A to II-D, inclusive, respondent (R. Br. 2) quotes a statement by the Master as to the "underlying issue" and then restates its version of the question presented. Neither is correct. The real issue is the scope of the rights granted by the 1927 agreement. The vital fact is that the lower Courts have so completely departed from legal standards in the construction of documents, as established by this Court, as to call for an exercise of this Court's power of supervision. The Courts below have departed from accepted standards in determining the scope of the license in the following respects:

(a) they have ignored the practical construction of the agreement by the parties over a long period of years;

(b) they have ignored the purpose of the parties in drawing the agreement, *i.e.*, to resolve the conflict as to "claims to common subject-matter";

(c) they have ignored the clear limitations in the agreement itself to "claims to common subject-matter"; and

(d) they have applied an unwarranted expansion of the doctrine of implied rights contrary to the decisions of this Court and the Courts of Appeals.

In view of certain findings by the Courts below (not here contested), petitioners admit that the license to United under the "claims to common subject-matter"

protects respondent *as to those claims,* but only as to those claims, *all of which are in patent '195 and none in patent '016.* The "full scope" of the grant is a limited license under those claims, and respondent is entitled to the enjoyment of the "full scope" of that grant; but, the enjoyment of immunity under patent '195 does *not* entitle it to immunity under patent '016, which relates to a different invention. Respondent has seen fit, in its commercial operations, to appropriate an invention under which no rights were granted, and it is now seeking to evade payment for its appropriation of that invention.

On the basis of some alleged "commercial status" of the parties, respondent attempts (R. Br. 4-5) to modify that language of the 1927 agreement which limits the rights granted to the "claims to common subject-matter." There is no substantial evidence to support this argument. It is based primarily on speculation. But, even if the parties had had that situation in mind, the fact remains that the rights granted were limited to the "claims to common subject-matter." Moreover, it is impossible to see how or why United's or respondent's rights under the agreement can be enlarged by the commercial situation when it is borne in mind that United, at that time, was not even making or selling mills within the scope of patent '016.

At the time of the agreement, Cold Metal had in operation several all-pull mills. They were within the scope of both patents '195 and '016. At that time, United had installed the Rome mill and had on order a number of other similar mills. The evidence shows that the Rome mill used only a winding tension and, hence, was

not an '016 mill.* Moreover, contrary to respondent's suggestion, there is no evidence to show that the 63 mills which United had on order involved the use of any tension.

Therefore, since there is nothing in the record to indicate that United was making and selling '016 mills, it is impossible to see how anything in the commercial situation of the parties can justify a complete disregard of the express limitations contained in the agreement.

Respondent now admits (R. Br. 8) that the Courts below held that the license was for "specific mill structures operated in a defined way." This admission points up the errors of the Courts below, for the agreement on its face shows conclusively that it was a license under certain claims only and not a license for specific mill structures. The Master, in a draft report (J. App. I. 274-91), recognized this distinction, but then later became confused and considered the license to be one for specific mill structures, thus ignoring completely the express limitation of the agreement to the "claims to common subject-matter." Respondent's admissions made earlier in this case completely refute its present arguments and the holdings of the Courts below, for it clearly admitted that the license was one "under certain common subject-matter claims" (J. App. VI. 455-56, 453).

---

* It is significant that respondent, in its discussion of the Rome mill (R. Br. 4) omits that part of the statement of the Court below to the effect that only a "small" amount of tension was employed on it (Pet. App. A, p. 30a).

At to Questions II-A to II-D.

Respondent's argument (R. Br. 9-10) based upon Chart I ignores the limitation in the agreement "under such claim or claims" which limits the immunity granted to the '195 claims. Also, by its bracketed interlineations in Paragraph 5 of the chart, respondent misrepresents the true meaning of the words "under such claim or claims." That chart is of no value from respondent's standpoint, but it does serve to point up the fact that the part bracketed in blue only is outside the scope of the grant embraced within the red lines.

Respondent's argument (R. Br. 10) about not being able to enjoy the full scope of the license grant again ignores the essential nature of the grant and the fact that it was limited to "claims to common subject-matter," *i.e.*, the claims of patent '195. Respondent's argument likewise ignores the fact that enjoyment of "the full scope of the license grant" merely means enjoyment of immunity under the claims under which the rights were granted. The holdings of the Court below relied upon by respondent (R. Br. 10-11) likewise fail to recognize and give effect to the express limitation of the grant to the "claims to common subject-matter."*

Respondent argues (R. Br. 11-12) that "the express license granted was specifically for 4-high mills embodying the '195 claims and operated with up to 50% tension" and then makes the astonishing assertion that "Cold Metal cannot and does not deny" this. Cold Metal does

---

*A mere reference to the parts of the opinions quoted by respondent shows that the tribunals below completely misconstrued the nature of the grant, treating it as a grant on specific mills instead of a grant under specific claims.

deny this and always has, as its arguments demonstrate. The language used by respondent to characterize the agreement is not found anywhere in it. The agreement does not even purport to grant a license on mills "embodying the '195 claims." It purports to grant, was intended to grant, and does grant only a license under the "claims to common subject-matter," none of which is in patent '016.

Respondent (R. Br. 13-14) attempts to refute petitioners' argument based upon the "practical construction" of the agreement by the parties and the "conflict with the *United* litigation" by quoting from the opinion of the Court of Appeals the statement that "This is the first occasion on which immunity as to '016 could be formally claimed." This statement by the Court of Appeals certainly cannot help respondent because, as we have demonstrated (Pet. 24-25), that statement is wholly erroneous. United's customer, the Steel Corporation, many years ago (just like United's customer here) formally claimed and asserted immunity under patent '016 and the Court's holding in that case was exactly the opposite of the Court's holding in this case (Pet. 24).

As to the second paragraph quoted from the Court of Appeals' decision (R. Br. 13), we have demonstrated it to be wholly erroneous because the issue was passed upon in two prior decisions in the *United* litigation and decided contrary to the decision in the case at bar* (Pet. 22-23, 29).

Respondent (R. Br. 16-17) misstates the situation as to the *Steel Corporation* litigation. The facts, as

---

*One of those decisions was based upon United's protestations that it had no rights in patent '016.

stated in the petition, are fully supported by the record in the *Steel Corporation* case, which is Exhibit P-279 in the case at bar. Furthermore, there can be no excuse for the advancement of the half-truth set forth in the footnote at page 17 of respondent's brief. Exhibit P-279 shows clearly that Cold Metal, in the *Steel Corporation* litigation, asserted patent '016 successfully against mills driven with less than 50% tension. The mills involved there were substantially the same as those involved here, as is shown by the comparison set forth in APPENDIX D appended hereto.

Respondent (R. Br. 18) recognizes that the existence of the many pending cases mentioned at pages 27-29 of the petition "makes it a possibility that an actual conflict" between the decision below and other decisions may develop, but brushes this possibility aside on the ground that this Court may later consider the issues if such a conflict develops. It is only by reviewing the case at bar that this Court can prevent substantial injustice to petitioners in this action resulting from the decision below. A later review of these important issues would not help petitioners so far as its recovery against respondent is concerned. Moreover, the possibility of a conflict developing is materially minimized by the fact that such a large portion of the pending litigation is in the Sixth Circuit (Pet. 27-28).

IV.

CONCLUSION.

We submit that, for the reasons stated in the petition, the writ should be granted.

Respectfully submitted,

WILLIAM H. WEBB,
HOWARD F. BURNS,
CLARENCE B. ZEWADSKI,
Counsel for Petitioners.

MORTON BURDEN, JR.
Of Counsel.

October 10, 1956

APPENDIX D.

Comparison of the Tension Values on the Steel Corporation's United Mills Held to Infringe Patent '016 With Those of Republic.

Steel Corporation Sheet Mills	
Steel Corporation values	14.5% to 18.1%
Cold Metal values	15.1% to 19.5%
Steel Corporation Tin Plate Mills	
Steel Corporation values	12.2% to 21.8%
Cold Metal values	13.2% to 21.7%
Republic's Mill No. 40	12.6% to 33.3%
Republic's 34" Reversing Mill	22.2% to 38.5%
Republic's 20" Reversing Mill	30.0% to 57.3%
Republic's Mill No. 44	14.2% to 31.8%
Republic's Niles Tandem Mill	8.0% to 44.1%
Republic's 54" Tandem Mill	10.4% to 38.6%
Republic's No. 1 Tandem Mill	12.8% to 35.8%

The tension values set forth above for the Steel Corporation's mills (Ex. P-278, Vol. VI, pp. 1257-58; Vol. IV, p. 39) were computed in the manner adopted by the Courts below in this case. However, if computed in the manner adopted by Judge Fake in the *Steel Corporation* case, the values are as follows:

Steel Corporation Tin Plate Mills	
Steel Corporation's values	14.3% to 28.12%
Cold Metal's values	13.2% to 32.8%
Steel Corporation Sheet Mills	
Steel Corporation's values	19.7% to 41.7%
Cold Metal's values	31.0% to 76.4%

The only figure above 50% for any of the Steel Corporation's United mills was obtained on only one

pass on one of the sheet mills, the values for the other passes on the same mills being slightly over 30%. Similarly, on respondent's 20" Reversing Mill, values over 50% were obtained on more than one pass.

Thus, the above figures show that respondent uses even more tension than did the Steel Corporation on its United mills held to infringe.

2/20

Office - Supreme Court, U.S.
FILED
OCT 11 1956
JOHN T. FEY, Clerk

IN THE

Supreme Court of the United States

No. 358

OCTOBER TERM, 1956

THE COLD METAL PROCESS COMPANY and THE UNION NATIONAL BANK OF YOUNGSTOWN, OHIO, TRUSTEE,

Petitioners,

vs.

REPUBLIC STEEL CORPORATION,

Respondent.

REJOINDER BRIEF FOR RESPONDENT

DRURY W. COOPER
233 Broadway
New York, N. Y.
Counsel for Respondent

JOHN N. COOPER
ROBERT E. ISNER
233 Broadway
New York, N. Y.
Of Counsel

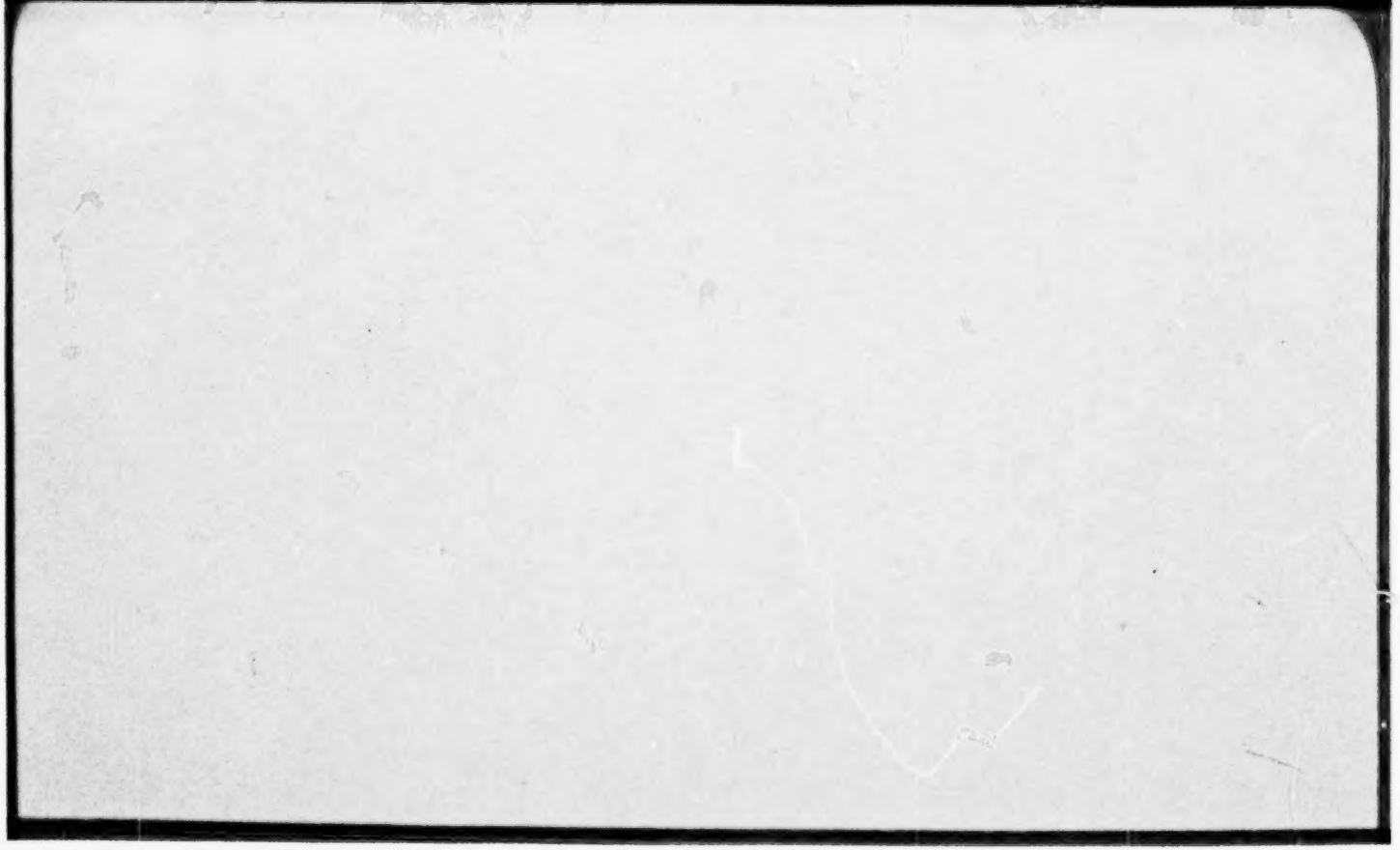

IN THE

Supreme Court of the United States

No. 358

October Term, 1950

THE COLD METAL PROCESS COMPANY and THE UNION NATIONAL BANK OF YOUNGSTOWN, OHIO, TRUSTEE,
Petitioners,

vs.

REPUBLIC STEEL CORPORATION,
Respondent.

REJOINDER BRIEF FOR RESPONDENT

A. As to Questions IA to ID

1. Petitioners do not controvert the fact (nor can they, in view of their concession that respondent is licensed under patent '195-Pet. Reply Br. pp. 6-7) that all issues as to patent '195 are and will remain moot in this case. Nor do they controvert the fact that all issues as to patent '016 are presently moot and will remain so unless and until Questions IIA to IID are considered appropriate for review and are resolved in petitioners' favor. Nor do they controvert the fact that Questions IA to ID inextricably intermingle the '195 and '016 patents. By such intermingling, the questions pose only moot issues and do not merit any consideration by this Court.

2. Petitioners' reply brief at best only emphasizes the fact that all that is here being sought is a further appellate review of purely factual matters decided adversely to their contentions by both Courts below. Such matters do not merit review by this Court.

3. Although petitioners again contend for a breadth of construction for the terms "antifriction backing" and "mounting" that would include the Morgoil bearings, they do so on the theory that the determinant is what the Morgoil bearing will do rather than its physical characteristics and manner of operation. In so contending they never meet the holding of the District Court, affirmed by the Court of Appeals, that such breadth of construction would, under the rule of the *Halliburton* case and other decisions of this Court (Res. Br. p. 27), render the claims invalid for indefiniteness.

B. As to Questions IIA to IID

1. Petitioners' reply brief further emphasizes the fact that petitioners are merely seeking further appellate review in an attempt to overturn the concurrent findings and holdings of the Master, District Court and Court of Appeals with respect to the interpretation of the particular wording of a private contract.

2. Petitioners, having had their contentions denied in all tribunals below, are attempting to have this Court sanction a course of conduct which would permit Cold Metal, as the District Court aptly put it, "to take away with its left hand that which it had promised to deliver with its right" (Res. App. A, 41a-42a). This Court should note that petitioners do not controvert the fact that operations which fall within the scope of the express grant, even as they view it, infringe the '016 patent as it was construed below to include mill operation with tension drives of below 50% (see Chart I, at end of Respondent's Appendix).

3. In an attempt to avoid the fact that the '016 patent was construed in the *Steel Corporation* case to encompass only tension drives of over 50%, and the further fact that the mills therein accused were found to infringe only because they were so operated (Res. Br. pp. 16-17), petitioners refer to incompetent exhibit material from that litigation as proof of fact in this action. The *Steel Corporation* case appeal record was admitted in evidence herein only on the express representation of petitioners counsel that such was not being offered "for the purpose of showing any of the facts introduced in evidence in that prior litigation"[1]. In any event, the values set forth in Appendix D to petitioners' reply brief and purportedly originating in the *Steel Corporation* record, certainly were not adopted or followed by Judge Fake in that litigation, for the figures set forth in Judge Fake's opinion (*22* F. Supp. 75, 80 2d Col.) cannot be found in either said Appendix D or in either of the two exhibits in the *Steel Corporation* record that petitioners refer to.

C. Conclusion

The petition for a writ of certiorari in all respects should be denied.

Respectfully submitted,

DRURY W. COOPER
Counsel for Respondent

JOHN N. COOPER
ROBERT E. ISNER
Of Counsel

---

[1]Transcript of Record p. 8864-6.

Office - Supreme Court, U.S.
FILED
NOV 23 1956
JOHN T. FEY, Clerk

IN THE

Supreme Court of the United States

OCTOBER TERM, 1956

NO. 358

THE COLD METAL PROCESS COMPANY and
THE UNION NATIONAL BANK OF
YOUNGSTOWN, OHIO, TRUSTEE,
Petitioners,

v.

REPUBLIC STEEL CORPORATION, Respondent.

PETITION FOR REHEARING

WILLIAM H. WEBB,
1220 Farmers Bank Building,
Pittsburgh, Pennsylvania

HOWARD F. BURNS,
1956 Union Commerce Building,
Cleveland, Ohio.

CLARENCE B. ZEWADSKI,
3053 Penobscot Building,
Detroit, Michigan
Counsel for Petitioners.

MORTON BURDEN, JR.,
1220 Farmers Bank Bldg.,
Pittsburgh, Pennsylvania
Of Counsel.

November 29, 1956

SMITH BROS. CO. INC., LAW PRINTERS, 434-436 BLVD. OF ALLIES, PITTSBURGH 19, PA.

IN THE

Supreme Court of the United States

OCTOBER TERM, 1956

NO. 358

THE COLD METAL PROCESS COMPANY and THE UNION NATIONAL BANK OF YOUNGSTOWN, OHIO, TRUSTEE,
Petitioners,

v.

REPUBLIC STEEL CORPORATION, Respondent.

PETITION FOR REHEARING

Petitioners respectfully request a rehearing on their petition for a writ of *certiorari,* filed herein on August 29, 1956, to review a judgment of the Court of Appeals for the Sixth Circuit (233 F. 2d 828).

The factor which induced this Court to grant *certiorari* on petitions for rehearing in the *Schriber-Schroth* case[1], the *Muncie Gear* case[2], the *Exhibit Supply* case[3] and the *Tri-Ergon* cases[4] is equally present

1. *Schriber-Schroth Co. v. Cleveland Trust Co. et al.,* (1938) 305 U.S. 47.

2. *Muncie Gear Works, Inc. et al. v. Outboard, Marine & Manufacturing Co. et al.,* (1942) 315 U.S. 759.

3. *Exhibit Supply Co. v. Ace Patents Corporation,* (1942) 315 U.S. 126.

4. *Paramount Publix Corp. v. American Tri-Ergon Corp.,* (1935) 294 U.S. 464; *Altoona Publix Theatres, Inc. v. American Tri-Ergon Corp. et al.,* (1935) 294 U.S. 477.

in the case at bar. That factor—the grave unlikelihood of a subsequent conflict between Courts of Appeals on the same important issue—is present here as in those cases because of the concentration of the litigation on the same patents in the same Circuit. Also, in this case, as in the cases just cited, the decision below is patently erroneous.

The same important issues as those decided erroneously by the Court below are involved in the following additional cases pending in the Sixth Circuit:

A. *The Cold Metal Process Company et al. v. Aluminum Company of America,* Civil Action No. 661, Eastern District of Tennessee, Northern Division;

B. *E. W. Bliss Company v. The Cold Metal Process Company et al.,* Equity No. 5402, Northern District of Ohio, Eastern Division;

C. *The Union National Bank of Youngstown, Ohio, Trustee, v. E. W. Bliss Company,* Civil Action No. 26,542, Northern District of Ohio, Eastern Division;

D. *The Union National Bank of Youngstown, Ohio, Trustee, v. Greer Steel Company,* Civil Action No. 24,189, Northern District of Ohio, Eastern Division;

E. *The Cold Metal Process Company v. Detroit Steel Corporation,* Civil Action No. 4730, Eastern District of Michigan, Southern Division;

F. *The Union National Bank of Youngstown, Ohio, Trustee, et al. v. Bopp Steel Corporation,* Civil Action No. 5663, Eastern District of Michigan, Southern Division.

These cases and the case at bar represent about 93% of the total possible remaining litigation on these important patents. The remaining 7% is divided between two cases in other Circuits, but neither involves infringements of sufficient amount to justify the trial thereof if the cost of the earlier litigation is accepted as a criterion.

One of the cases listed above, the *Aluminum* case, has not been decided but has been tried at great expense to the parties, the trial before the Master lasting 100 Court days extending over a period of more than one year and the record consisting of 13,817 pages of transcript and over 1300 exhibits. Unless the case at bar is reviewed by this Court, that case and any of the other cases mentioned above which may be brought on for trial (at a per case cost of many thousands of dollars) will be ruled by one or both of the erroneous holdings below on legal issues of great importance to the administration of the Patent Laws and the relative rights of licensors and licensees under patent license agreements.

There is one case pending in the Seventh Circuit involving both questions raised in the petition, namely, the *Granite City* case,[5] and one in the Fourth Circuit

5. *The Cold Metal Process Company et al. v. Granite City Steel Company,* Civil Action No. 469, Southern District of Illinois.

involving the second issue raised in the petition, namely, the *Revere* case.[6] These cases are so small as compared with those pending in the Sixth Circuit that, as a practical matter, there is an almost complete concentration in the Sixth Circuit. The case at bar involves 51 mill stands, the *Aluminum* case 24 mill stands, the *Bliss* cases at least 37 mill stands, and all the others in the Sixth Circuit 18 mill stands, or a total of 130 mill stands. The *Granite City* case in the Seventh Circuit involves 3 mill stands, and the *Revere* case in the Fourth Circuit involves about 7 mill stands. Thus, the litigation in the Sixth Circuit represents a concentration of about 93%, which is approximately the same degree of concentration as there was in the Sixth Circuit in the *Schriber-Schroth* case.

Of course, a substantial part of the metal rolling industry has recognized the patents in suit and petitioners' rights *as asserted here* in respect of the scope of the patents and the scope of the United agreement; and it is for this reason that we stated in the petition (pp. 23, 25, 31) that the decision below has created such an anomalous situation in the industry.

From a practical standpoint, this is petitioners' last chance to right the wrongs created by the decision below. The time required for depositions and other trial preparations, trial and appeals, and the costs involved, would make it almost prohibitive, bearing in mind the potential recoveries, to carry either or both of the small cases in the Seventh or Fourth Circuits to the point

---

6. *The Union National Bank of Youngstown, Ohio, Trustee, v. Revere Copper & Brass, Inc.*, Civil Action No. 2513, District of Maryland.

where a conflict with the decision below might develop. Moreover, even if a conflict did develop some years in the future, there is no assurance that the infringer in that case (who would have failed on these issues if a conflict developed) would petition this Court for a writ, since the amount involved would be quite small. On the other hand, if the present petitioners should lose in those cases, there would be no conflict and no chance whatever to get to this Court on the basis of a conflict.

Consequently, from a practical standpoint, it is clear that petitioners' only chance to right the erroneous rulings below lies in the case at bar.

While we have pointed out the concentration of the litigation in the Sixth Circuit and the consequent unlikelihood of a conflict, particularly as regards Question I of the petition, it should be borne in mind that *there is a presently existing conflict* as to Question II because the decision of the Court below is clearly in conflict with (a) the actual holdings of the Courts in the *Carnegie-Illinois* litigation (Pet. pp. 29-30; Pets.' Rep. Br. pp. 10-11 and Appendix D), and (b) the decisions in the Third Circuit in the *United* litigation (Pet. pp. 22-23, 30; Pets.' Rep. Br. p. 10). Moreover, the appraisal of the scope of the United agreement by the parties and by about 85% of the steel industry, which has recognized petitioners' rights *as asserted here* and paid over $28,000,000.00 to petitioners for licenses under such rights, is in conflict with the decision below. Of all the large companies in the steel industry, the decision below places Republic alone in an entirely different category than the others.

Certificate.

In our petition, we showed that the decision of the Court of Appeals is in discord with many decisions of this Court and of many Courts of Appeals. We will not repeat here those arguments, except to pray the Court to reexamine the points brought out in the petition, in view of this petition for rehearing, and to grant the writ.

Wherefore, petitioners pray that the petition be reexamined and reconsidered in view of this petition for rehearing and that the writ be granted.

Respectfully submitted,

WILLIAM H. WEBB,
HOWARD F. BURNS,
CLARENCE B. ZEWADSKI,
Counsel for Petitioners.

MORTON BURDEN, JR.
Of Counsel.

November 29, 1956

CERTIFICATE

I hereby certify that the foregoing petition for rehearing is presented in good faith and not for delay and that the petition is restricted to the grounds specified in and is in conformity with Rule 58.

WILLIAM H. WEBB
Counsel for Petitioners.

IN THE

Supreme Court of the United States

OCTOBER TERM, 1956

NO. 358

THE COLD METAL PROCESS COMPANY and
THE UNION NATIONAL BANK OF
YOUNGSTOWN, OHIO, TRUSTEE,
Petitioners,

v.

REPUBLIC STEEL CORPORATION, Respondent.

AFFIDAVIT OF WILLIAM H. WEBB

Commonwealth of Pennsylvania }
County of Allegheny } ss.:

WILLIAM H. WEBB, being duly sworn, deposes and says:

1. I am a member of the bar of the Supreme Court of the United States, the Supreme Court of Pennsylvania and various United States Courts of Appeals and District Courts.

2. As set forth in the affidavit filed in conjunction with the petition herein, I am familiar with all of the pending litigation relating to the Steckel patents Nos. 1,779,195 and 1,744,016.

3. In the litigation pending in the Sixth Circuit, the Republic case, i.e., the case at bar, involves 51 mill stands, the Aluminum Company case involves 24 mill stands, the Greer Steel case involves 13 mill stands, the Detroit Steel case involves 2 mill stands, the Bopp Steel

case involves 3 mill stands, and the Bliss cases involve at least 37 mill stands, making a total of 130 mill stands.

4. The Granite City case pending in the seventh Circuit involves 3 mill stands.

5. I am not fully familiar with all of the mills of Revere Copper & Brass, Inc., but, based upon an inspection of some of Revere's mills and information which has been supplied to me with regard to other Revere mills, it appears that the Revere case pending in the Fourth Circuit involves no more than about 7 mill stands. At one time or another during the lives of the patents in suit, Revere had several other 4-high mill stands which are not included in the above figure because their use did not trespass upon the rights of petitioners. Moreover, several of Revere's 4-high mills were installed only a few months prior to the expiration of the patents and, hence, are of little or no consequence.

6. Based upon the above figures, approximately 93% of the litigation is pending in the Sixth Circuit, 2% in the Seventh Circuit and 5% in the Fourth Circuit. No further infringement actions can be filed by petitioners in respect of the patents in suit because the patents expired more than six years ago and there are no special circumstances rendering the statute of limitations inapplicable.

WILLIAM H. WEBB

Sworn to and subscribed before me this 26th day of November, 1956.

MARY C. SHANAHAN
Notary Public